Final Erosion Mitigation Design Report
Operational & Functional Activities
Imperial Refining Superfund Site
Ardmore, Oklahoma

EPA Region 6 Remedial Action Contract 2
Contract: EP-W-06-004
Task Order: 0039-RARA-06GX

Prepared for
U.S. Environmental Protection Agency
Region 6
1445 Ross Avenue
Dallas, Texas 75202-2733

Prepared by
EA Engineering, Science, and Technology, Inc.
405 S. Highway 121
Building C, Suite 100
Lewisville, Texas 75067
(972) 315-3922
Oklahoma Certificate of Authorization Number 3026

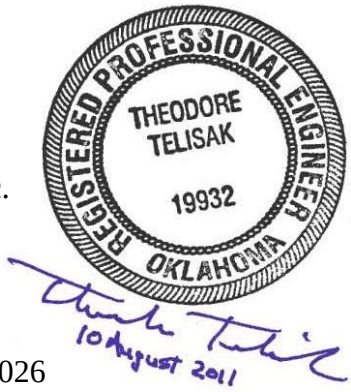

August 2011
Revision: 01
EA Project No. 14342.39

CONTENTS

1. INTRODUCTION 1
   1.1 SITE DESCRIPTION AND BACKGROUND 1
      1.1.1 History of Remedial Actions 2
      1.1.2 History of Operational & Functional Activities 3
   1.2 GEOTECHNICAL INVESTIGATION 3

2. DESIGN CRITERIA REPORT 4
   2.1 AREAS OF EROSION CONCERN 4
      2.1.1 Erosion Areas 4
      2.1.2 Eroded Channels 4
      2.1.3 East Pond Outlet 5
      2.1.4 Existing Utilities 5
   2.2 HYDROLOGY 5
   2.3 LONG TERM PERFORMANCE AND MAINTENANCE REQUIREMENTS 6

3. BASIS OF DESIGN REPORT 6
   3.1 SUMMARY AND JUSTIFICATION OF DESIGN 6
      3.1.1 Woodchips 6
      3.1.2 Overflow Channel 7
      3.1.3 Channels 7
      3.1.4 Erosion Areas 8
   3.2 CALCULATIONS, SUPPORTING ASSUMPTIONS, AND REFERENCES 8
      3.2.1 Channels 8
      3.2.2 Erosion Area Slopes 9
   3.3 OTHER DESIGN CONSIDERATIONS 10
      3.3.1 Permits 10
      3.3.2 Identification of Easement and Access Requirements 10

4. DRAWINGS AND SPECIFICATIONS 10
   4.1 DRAWINGS AND SCHEMATICS 10
   4.2 OUTLINE OF GENERAL SPECIFICATIONS 11

5. FINAL EROSION MITIGATION COST ESTIMATE 11

REFERENCES

APPENDICES

Appendix A	Photo Log
Appendix B	Drawings
Appendix C	Specifications
Appendix D	Geotechnical Report
Appendix E	HydroCAD Summary
Appendix F	Cost Estimate

LIST OF TABLES

1 Erosion Areas

2 Storm Rainfall

3 Drainage Areas and Estimated Runoff

ACRONYMS AND ABBREVIATIONS

AOEC	Area of Erosion Concern
cfs	cubic feet per second
EA	EA Engineering, Science, and Technology, Inc.
EPA	U.S. Environmental Protection Agency
FGM	Flexible Growth Medium
fps	feet per second
IRC	Imperial Refining Company
OPDES	Oklahoma Pollutant Discharge Elimination System
ODEQ	Oklahoma Department of Environmental Quality
ODOT	Oklahoma Department of Transportation
RA	Remedial Action
RI	Remedial Investigation
ROD	Record of Decision
RTK GPS	Real Time Kinematic Global Positioning System
SF	Square Foot
SWPPP	Stormwater Pollution Prevention Plan
TRM	Turf Reinforcement Mat

1. INTRODUCTION

EA Engineering, Science, and Technology, Inc. (EA) has prepared this Final Erosion Mitigation Report for Task Order 0039-RARA-06GX under U.S. Environmental Protection Agency (EPA) Response Action Contract No. EP-W-06-004.

The purpose of this Final Erosion Mitigation Design Report is to present the drawings and specifications that will be used to remedy the issues associated with surface water runoff and discharge, which are causing significant erosion , and to support overall vegetative growth and continued protection of human health and the environment.

This Final Erosion Mitigation Design Report will address: (1) existing erosion issues (2) protecting utilities in the erosion areas and channels; (3) dynamics/hydrology of the surface water discharge; (4) slope and channel stabilization; and (5) the estimated cost to complete the erosion mitigation.

In addition to the text discussion, this Report is supported by documents provided in the following appendices:

- Appendix A — Photo Log
- Appendix B — Drawings
- Appendix C — Specifications
- Appendix D — Geotechnical report
- Appendix E — HydroCAD model results
- Appendix F — Cost estimate

1.1 SITE DESCRIPTION AND BACKGROUND

The Imperial Refining Company (IRC) Site is the location of a former petroleum refinery that operated from 1917 to 1934. The legal description for the property is Southeast ¼, Northeast ¼, Section 20, and Southwest ¼, Northwest ¼, Section 21, T4S, R2E, Indian Meridian; which is located within the northeastern portion of the City of Ardmore, Carter County, Oklahoma. The Site covers approximately 72 acres and is bisected by U.S. Highway 142 (Veterans Boulevard). Along one edge are railroad tracks operated by the Burlington Northern Santa Fe Railway Company. Numerous tanks and buildings were present on the Site during refinery operation. However, all of the tanks and most of the buildings were dismantled sometime between 1934 and 1948 leaving the property in much the same condition as it is today with mixed wooded areas and open fields. The site includes two ponds (West and East Pond), two channels (Channel 1 and Channel 2), and one box culvert under Veterans Boulevard. Primary access to the site is through two locked gates located on Veterans Boulevard. The National Superfund electronic

database identification number for the Site is OK0002024099. Sheet 3 of the Drawings (Appendix B) is a map of the existing conditions.

1.1.1 History of Remedial Actions

Remedial Investigation (RI) field work began with a Site reconnaissance in February 2005. The subsequent field work was conducted in two phases; Phase 1 was conducted from September through December 2005 and Phase 2 was conducted in March 2006. The Feasibility Study, prepared by Weston Solutions Company, was completed in May 2007.

Based on the previous work by EPA and the Oklahoma Department of Environmental Quality (ODEQ), thirteen areas of contamination were identified at the Site. These areas were designated because they represented either a potential primary source of contamination (i.e., refining process area, vertical tank remnants, waste areas, and horizontal tanks), potential areas that had been contaminated by the primary sources and may themselves have become secondary contamination sources (i.e., drainages, East and West Ponds, soils, wet areas, ground water, and Sand Creek), or areas that represent background or affected locations/media of concern (i.e., background, air, and the probable point of entry into Sand Creek).

The Record of Decision (ROD) was finalized on 26 December 2007. The selected remedy consisted of excavation and offsite disposal of contaminated waste, sediment, and soil.

The EPA began onsite Remedial Action (RA) construction 13 February 2008. As excavation of the waste material began and continued into the following weeks, it became clear that the vertical and horizontal extents were understated, and the original volume estimate was low. As excavation activities progressed, waste was found to exist in locations where removal would be both impracticable and unsafe. Due to the increase in horizontal and vertical extent, volume, and locations where waste remains in place, aspects of the original remedy were reevaluated, and the extent of the remedial action was greatly increased.

On 18 September 2008, the Preliminary Close-Out Report was signed, documenting construction completion. A total of 105,993 cubic yards (107,300 tons) of material was excavated and shipped offsite for disposal. Approximately 64,000 cubic yards of backfill were imported for slope stabilization, grading, and vegetation. An additional 13,356 CY of onsite material was used as backfill as well.

EPA released the ROD Amendment Proposed Plan to the public for review and comment from 3 November 2008 to 3 December 2008. EPA and ODEQ held a public meeting on 18 November 2008, in Ardmore, Oklahoma, to discuss this document. The ROD Amendment was published 20 February 2009. The ROD Amendment detailed the following: the increase in waste/soil volume excavated, transported, and disposed offsite; the increase in remediation cost; the change in cleanup levels; the areas where waste remains in-place; the placement of institutional controls; and the addition of operation and maintenance and five year reviews.

1.1.2 History of Operational & Functional Activities

EA's field activities began with the seeding of the site in April 2009. EA performed sediment sampling of the East Pond and West Pond on 14 April 2009 and 21 July 2009. Additional field activities conducted by EA included wood chipping and the spreading of mulch between 16 April and 7 July 2009. Erosion control measures were implemented between 14 April and 17 December 2009 and consisted of installing mulch bands, silt fences, straw wattles, riprap, and surge stone in areas of heavy erosion on the western parcel of the site. The multiple temporary erosion methods were in response to heavy rains (reportedly 10 inches in a 24-hour period) in May 2009. With little or no established grass ground cover across the site and a vulnerable type of soil exposed, serious erosion occurred across the site in the form of new storm water flow patterns, rills, and washouts of control measures implemented during the RA.

In June of 2010, a site topographic survey was conducted using Real Time Kinematic Global Positioning System (RTK GPS) equipment. The survey included disturbed areas and severely eroded areas throughout the site. The survey was necessary to estimate fill, seeding, topsoil, channel construction, and runoff area quantities. The survey was completed in one week and all elevations were referenced to the Oklahoma South State Plane coordinate system.

In November 2009 and November 2010, EA personnel visited the site to inventory and categorize the eroded areas. The 2010 site visit revealed that some of the bare and highly eroded areas observed in November 2009 had naturally revegetated one year later without human assistance, and some of the eroded areas began to naturally fill in and stabilize. EA used the 2010 inventory and categorization of eroded areas in preparation of the proposed design in this report.

1.2 GEOTECHNICAL INVESTIGATION

In October of 2010, a geotechnical investigation was conducted by Integrated Testing and Engineering Company. Six soil borings were drilled to depths between 2 and 12.5 feet below existing grade near the outlet of the Veterans Boulevard culvert. The soil borings revealed that the top 2-5 feet of soil are medium-dense clayey sand or sandy clay, with lower strata mostly stiff lean clay down to the bottom of the borings. Three bulk samples were collected from the ground surface at different locations across the site. Various tests, including soil classifications and grain size analysis, were conducted on those samples. The bulk samples indicated that surface soil throughout the site consists of well-graded sandy lean clay and clayey sand.

The results of the geotechnical investigation were intended to assist with estimating sediment transport potential, and structural footing design. The structural footing design parameters were subsequently found to be unnecessary, as the design presented in this report does not rely on them. The Geotechnical Report, included as Appendix D, includes a detailed description of subsurface conditions, engineering analysis, and design recommendations.

2. DESIGN CRITERIA REPORT

The following sections provide the Design Criteria Report that describes the technical parameters upon which the design is based.

2.1 AREAS OF EROSION CONCERN

2.1.1 Erosion Areas

Several Areas of Erosion Concern (AOECs) are present at the site. Appendix A is a photo log of several erosion features in the AOECs. Sheet 4 of the Drawings (Appendix B) shows each erosion area and Table 1 shows the acres in each area. The areas have been designated as Poor Soil Areas, High Erosion Areas, Moderate Erosion Areas, and Low Erosion Areas. Their characteristics are as follows:

- The Poor Soil Area covers 3.3 acres and is mostly sandy clay. Vegetation was not successfully established during the RA.
- The High Erosion Areas comprise 0.5 acres of steep hill sides, which have developed large rill erosions up to 3 feet deep.
- The Moderate Erosion Areas comprise 2.5 acres of gently sloping hill sides and drainage swales that have developed small rill erosions. Many of the silt fences and straw wattles placed in the Moderate Erosion areas have been undermined or stormwater has washed around them, creating more rill erosions.
- The Low Erosion Areas comprise 1.6 acres of relatively flat ground where vegetation has been slow to grow or is not thriving. These areas have the potential to develop rill erosions.

Many of the areas which were covered with thick layers of woodchips after the RA have remained stable. However, due to the thickness of the woodchips, vegetation has not established in these areas and they are at risk of erosion until a vegetative cover is achieved (Photo 1, Appendix A). In Erosion Area 1, the woodchips were washed out by heavy rainfall and rill erosion formed around the ends of the straw wattles. Runoff from Veterans Boulevard has caused a High Erosion Area on the steep hill side on the north side of the culvert outlet.

2.1.2 Eroded Channels

The existing drainage channels have been labeled as Channel 1 in the southwest and Channel 2 in the northeast. The most severe erosion is in Channel 1. Channel 1 has split into two large (approximately 10 feet across) and deep (approximately 6 feet top to bottom) gullies and exposed several large boulders (Photo 2, Appendix A). Also, an underground gas line 12 feet west of the erosion in Channel 1 is at risk of eventually being exposed by continued future erosion. To prevent back cutting in the channel, riprap was placed in Channel 1 by EA in December 2009

and this slowed the erosion. However, due to the steep slope of the channel, it is very unlikely to silt in or stabilize without assistance.

Channel 2 is riddled with rill erosions across its entire south bank (Photo 3, Appendix A). The Veterans Boulevard culvert discharges into a riprap apron at the start of Channel 2. The riprap has been undermined and washed out during heavy rains. A plunge pool has begun to form at the end of the culvert's concrete apron, exposing a city water line and fiber optic cable (Photo 4, Appendix A).

2.1.3 East Pond Outlet

The two ponds at the site have been labeled as the West Pond and East Pond. The East Pond outflows into a concrete drainage structure. The weir of this structure is covered with sediment and plant growth, which has raised the effective elevation of the structure (Photo 5, Appendix A). The structure no longer adequately handles the pond's peak outflow, and during storms, the pond overflows into a newly formed channel 15 yards south of the concrete structure. The overflow has created a large washout adjacent to the railroad tracks. The washout is about 30 feet wide, 50 feet long, and 8 feet deep and an abandoned cast iron pipe has been exposed (Photo 6, Appendix A).

2.1.4 Existing Utilities

There are several underground utilities at the site. The approximate location of underground utilities is shown on Sheet 3 of the Drawings (Appendix B). A gas line owned by ONEOK, is located on the western side of the site, 12 feet west of the gully and existing riprap in Channel 1, transecting the site from north to south. A water pipe and fiber optic cable are located near the Veterans Boulevard culvert outlet. These utilities also transect the site from north to south parallel to Veterans Boulevard. Approximately 30 feet of these two conduits have been exposed by the erosion at the culvert outlet.

2.2 HYDROLOGY

A hydrological model was developed using the HydroCAD software program from information gathered during the topographic site survey. The model was designed to estimate the stormwater runoff, peak channel flow rate, and water velocity during 2-year, 5-year, 10-year, 25-year, and 100-year, 24-hour storm events. Table 2 shows the total rainfall for each storm size.

The site was divided into six drainage areas as shown on Figure 1 (Appendix E). Drainage Areas A and D drain to Channel 2, Drainage Area C drains into the West Pond, Drainage Area B drains to Channel 1, Drainage Area E drains into the East Pond, and Drainage Area F drains into the West Pond by way of a channel located south of the site. Drainage Areas A and F include offsite areas. The West Pond drains into the East Pond through a culvert under Veterans Boulevard. The site is a mixture of woodland and grassland with some areas of bare sandy clay and clayey sand. A runoff curve number of 76 (from the Soil Conservation Service curve number approach, which estimates the effect of infiltration and other issues on runoff) was used for the site to provide a conservative estimate of stormwater runoff. Table 3 shows the total area and estimated

runoff for each drainage area. Appendix E includes detailed HydroCAD model inputs and outputs for the drainage areas.

Hydraulic modeling of the channels and drainage areas was done with HydroCAD software. Information from the modeling was used to estimate required channel capacities and determine sediment transport potential across the site. The 100-year storm event was used for channel capacity design.

The 100-year storm was also considered for the East Pond overflow channel design, but it was found that the required weir structure would have been longer than the length of the proposed berm at the outlet. The hydraulic model provides an overestimated maximum flow rate for a given storm because it is not refined enough to account for possible reductions in peak flow related to pond storage or flow constrictions upstream of the East Pond. With this in mind, the 10-year storm was used for capacity design of the East Pond overflow channel. To guard against damage to the pond embankment during storms greater than the 10-year storm, the proposed berm will be armored. The estimated flows from the 100-year storm will cause little or no damage to the proposed berm, the pond outlet structure, or the area immediately downstream of the pond.

2.3 LONG TERM PERFORMANCE AND MAINTENANCE REQUIREMENTS

Maintenance will consist of site visits after rainfall events greater than the 2-year storm to determine if the implemented strategies are working as designed, followed by efforts to correct deficiencies if any are discovered. Vegetative cover will be evaluated during the site visit, and any new erosion features will be identified and outlined on a map. Measures will be taken to re-establish vegetative cover and repair erosion features if an issue is identified. Measures may include seeding and mulching, grading, or installing erosion control blankets. Watering of the site is not included being it is cost prohibitive.

3. BASIS OF DESIGN REPORT

The following sections provide descriptions of the major elements of design, discussion on the design assumptions, the erosion mitigation contracting strategy, permitting requirements, and identification of easement and access requirements.

3.1 SUMMARY AND JUSTIFICATION OF DESIGN

3.1.1 Woodchips

The thick layers of woodchips found in the AOECs will be cleared and stockpiled. The woodchips will be stockpiled in the areas shown on Sheet 5 of the Drawings (Appendix B). Stockpiles will be in areas that are outside of the AOEC, already covered in woodchips, and have no existing erosion issues. Removing the woodchips will allow vegetation to grow in the AOEC. Other woodchips throughout the site will be left in place. Woodchips remaining after the clearing process will be tilled into the soil so as to not interfere with the drill seeding process.

3.1.2 Overflow Channel

A berm will be constructed along the east bank of the East Pond and an overflow channel will be constructed adjacent to the existing concrete outlet. The berm will be approximately 2 feet high to allow the full height of the existing concrete outlet to be utilized for stormwater flow. The entire berm will be armored with TRM/FGM Armor to protect against erosion if overtopping occurs in a large storm event. Sediment and vegetation will be cleared from the weir of the existing concrete outlet. This will provide a higher flow rate through the outlet, and reduce the chances of overtopping the berm and causing another washout.

The overflow channel will be cut into the berm to provide an overflow route during 10-year storm events and it will be armored with riprap to protect against the expected water velocity. The existing washout will be filled with clean clay and graded to conform to the overflow channel. The clay fill will be armored with TRM/FGM Armor due to the steep slopes that are required.

3.1.3 Channels

Channels 1 and 2 will be constructed with imported clean clay and armored with TRM/FGM Armor. The channels will have a bottom width of 12 feet, side slopes of 5 horizontal to 1 vertical (5:1), and depth to provide capacity for the 100-year storm event runoff. The TRM/FGM Armor will cover the bottom and side slopes of the channels and will be anchored into check slots every 50 feet.

Check dams will be constructed in Channel 1 to transport water down the existing 10% slope. The purpose of the check dams is to act as weirs to slow the water velocity and mitigate erosion. The check dams will be rows of riprap embedded into the soil running perpendicular to the flow direction of the channel. There will be seven check dams, with a height of 1 foot, 2:1 slopes on the upstream and downstream sides, and spaced 12 feet apart.

Channel 2 will be armored with grouted riprap for 100 feet from the end of the outlet apron of the Veterans Boulevard culvert to slow the water velocity. The grout will lock the riprap into place and provide extra protection against the high water velocity and flow rate in Channel 2 during 100-year storm events. The grouted riprap channel will have a flow depth between 3 and 4 feet to provide capacity for the turbulent flow discharging from the culvert. The existing water and fiber optic lines will be encased in gravel and covered with grouted riprap.

The alignment of Channel 2 will be straightened from its current flow path to provide better hydraulic flow in the channel and reduce scour effects caused by abrupt channel bends. The existing channel will be filled in to direct stormwater runoff into the proposed channel. The downstream half of the existing channel will be regraded into a shallow swale.

3.1.4 Erosion Areas

The Poor Soil area (Area 12, Sheet 4 in Appendix B) will be graded smooth to remove rill erosion, covered with 3 inches of topsoil which will be tilled into the existing soil, prepared for seed, drill seeded with a mix of Bermuda and native grasses, and covered with mechanically anchored straw mulch. Compost and fertilizer will be mixed into the soil to provide nutrients for vegetative growth.

The High Erosion areas (Areas 2, 3, 8, and 11, Sheet 4 in Appendix B) will be graded smooth to remove rill erosion, covered with 3 inches of topsoil which will be tilled into the existing soil, prepared for seed, fertilized, drill-seeded with a mix of Bermuda and native grasses, and armored with a coconut fiber blanket. The coconut fiber blanket will stabilize the steep slopes in the High Erosion areas while vegetative cover is established. The topsoil cover will provide better soil for fast and healthy vegetative cover growth. Erosion Area 11 will be lined with TRM/FGM Armor to provide additional slope stability at the outlet of the 24 inch culvert.

The Moderate Erosion areas (Areas 1 and 7, Sheet 4 in Appendix B) will be graded smooth to remove rill erosion, prepared for seed, fertilized, drill seeded with a mix of Bermuda and native grasses, and covered with mechanically anchored straw mulch. Because the slopes in the Moderate Erosion areas are not as steep as the High Erosion areas, the coconut fiber blanket will not be required; however, it is important to anchor the mulch into the soil to provide some temporary stability until vegetation is established.

The Low Erosion areas (Areas 4, 5, 6, 9, and 10, Sheet 4 in Appendix B) will be prepared for seed, fertilized, drill seeded with a mix of Bermuda and native grasses and covered with mechanically anchored straw mulch. The disturbance to the Low Erosion areas will be minimized to limit damage to the existing vegetation.

3.2 CALCULATIONS, SUPPORTING ASSUMPTIONS, AND REFERENCES

3.2.1 Channels

New channels will be constructed to replace the existing eroded channels. A typical proposed channel will be 12 feet wide and have 5:1 side slopes from the bottom of the channel up to the existing terrain grade. The design depth of the channel will vary depending on the flow rate. The typical design criterion for a channel is to limit flow velocities to less than 5 feet per second (fps) to mitigate erosion. To achieve this, the channel slope generally must be less than approximately 0.5%. However, the channels at this site will range between 1% and 10% due to the existing terrain, and the flow velocities will be greater than 5 fps. The design will include constructing the channels with a top layer of imported clean clay and armoring the channels to provide erosion control in the sandy channel bottoms.

The channel armor will be a turf reinforcement mat (TRM) that is hydraulically infilled with flexible growth medium (FGM). The TRM is a three dimensional matrix of nylon filaments, which readily accepts hydraulic infill, captures soil, and encourages vegetative growth. The matrix resists crushing, unraveling, and tearing. The FGM is a hydraulically-applied mixture of

thermally refined wood fibers, crimped interlocking fibers, and additives that bond the TRM, seeds, and soil together. Half of the chosen seed will be mixed with the FGM and half will be applied on the soil. The FGM will encourage faster vegetative growth and the TRM will provide root reinforcement. TRM/FGM Armor can be advantageous for stabilizing channels because it resists erosion from high water velocities and it is more aesthetically pleasing than hard armor, *i.e.* riprap or concrete.

The outlet channel of the Veterans Boulevard culvert (Channel 2 on Sheet 4 of Appendix B) will require hard armor (riprap) due to the flow rate, velocity, and depth of flow. The culvert is 5 feet wide and 7 feet tall, and during a 100-year storm event the flow depth in the culvert can be up to 6.6 feet and the water velocity can be up to 9.7 fps. The culvert outlet will be protected with grouted riprap for approximately 100 feet of the channel. The grouted riprap will prevent scour, which without riprap could result in erosion and formation of a deep pool in the bottom of the channel. If the sandy soil under the grouted riprap channel is found to be unstable after the removal of the existing riprap, a decision will be made in the field by the engineer to add a layer of clay under the riprap. A water line and fiber optic cable run under this area within 50 feet of the culvert and have been exposed by erosion, and they will be covered by the grouted riprap.

Channel 1 will require a series of riprap check dams to allow water to flow down the steep grade without causing erosion. The maximum spacing between the dams will be such that the toe of the upstream dam is at the same elevation as the top of the downstream dam. This will form pools during flood events and slow the water velocity in the channel.

3.2.2 Erosion Area Slopes

The High Erosion areas have developed large rill erosion due to precipitation runoff. The method chosen to stabilize the slopes involves filling and grading the rill erosion smooth, tilling 3 inches of topsoil into the existing soil, and installing a coconut fiber erosion control blanket. Coconut fiber blanket has a top and bottom layer of polypropylene matting, which will reduce soil loss while the slope is unvegetated and also increase the shear resistance of vegetation. Sandwiched in-between the layers of polypropylene is a layer of straw and coconut fiber, which enhances the matting's initial mulching and erosion control performance. The coconut fiber blanket is designed for application on 2:1 to 1:1 slopes and the steepest slope in the High Erosion areas will be 2:1. Therefore the coconut fiber blanket is adequate to stabilize the slopes in the High Erosion areas.

The rill erosion on the slopes in the Moderate Erosion areas will be filled in and graded smooth. A seed mix of Bermuda and native grasses will be used in all areas to be seeded to provide vegetative cover quickly in the sandy soil at the site. Straw mulch will be mechanically anchored into the soil to mitigate rill erosion until vegetation is established. Mechanical anchoring will be done by a V-type wheel or disk land packer, which forces the mulch into the soil surface. The native grass mix includes Blue Grama, Sideoats Grama, Little Bluestem, Big Bluestem, Indiangrass, Buffalograss, Green Sprangletop, and Switchgrass. The Low Erosion areas, which are on relatively flat ground and do not have adequate vegetation coverage, will be addressed with drill seeding and mechanically anchored mulch.

3.3 OTHER DESIGN CONSIDERATIONS

3.3.1 Permits

The ODEQ regulates construction storm water discharges for sites with more than 1 acre of disturbed area. OPDES General Permit No. OKR10 applies to both small and large construction sites. The EPA is not required to file a Notice of Intent or submit a Stormwater Pollution Prevention Plan (SWPPP) to the ODEQ, however a SWPPP will be developed and the contractor will follow stormwater best management practices.

3.3.2 Identification of Easement and Access Requirements

Earthwork will be conducted at the Site. The portions of the erosion mitigation that will require easements and/or access are summarized below:

- ODOT: High Erosion Area 11 and Channel 2 will require riprap, grout, earthwork, seeding, and installation of coconut fiber blanket in the right-of-way of Veterans Boulevard. ODOT will require a representative at the site during construction activities related to High Erosion Area 11 and Channel 2. EA will coordinate with Jeff Pearl (405-522-5195).
- Ardmore Public Works: Channel 2 will require earthwork and installation of gravel, riprap, and grout around a city water line. Ardmore Public works will require a two week notice before work begins around the water line to apply a protective coating. EA will coordinate with Ardmore Public Works (Shawn Geurin 580-221-5402, or Blake Rudd 580-221-5401).
- Chickasaw Telephone Company: The grouted riprap section of Channel 2 will require earthwork and installation of gravel, riprap, and grout around a fiber optic line. The Chickasaw Telephone Company will require a representative at the site during construction activities near the fiber optic line. EA will coordinate with Chickasaw Telephone Company (580-622-2111) early in the construction process.

4. DRAWINGS AND SPECIFICATIONS

This section identifies the drawings and specifications that have been prepared for this Report.

4.1 DRAWINGS AND SCHEMATICS

Below is a listing of drawings that are included in the final design and are included in Appendix B.

- T-1 Sheet 1 Cover Sheet
- G-1 Sheet 2 General Notes and Control Points
- C-1 Sheet 3 Existing Conditions
- C-2 Sheet 4 Site Layout Index

- C-3 Sheet 5 Proposed Improvements - Southwest
- C-4 Sheet 6 Proposed Improvements - Northwest
- C-5 Sheet 7 Proposed Improvements – Northeast/Southeast
- C-6 Sheet 8 Channel Cross Sections
- C-7 Sheet 9 Erosion Area Cross Sections
- C-8 Sheet 10 Details

4.2 OUTLINE OF GENERAL SPECIFICATIONS

Below is a listing of specifications that are included in the final design and in Appendix C.

Division 1 – General Requirements

- 01 10 00 Summary
- 01 20 00 Price And Payment Procedures
- 01 33 00 Submittal Procedures
- 01 40 00 Quality Requirements
- 01 50 00 Temporary Facilities And Controls
- 01 70 00 Execution And Closeout Requirements

Division 31 – Earthwork

- 31 10 00 Site Clearing
- 31 23 16 Excavation
- 31 23 23 Fill
- 31 34 19 Geosynthetic Soil Reinforcement
- 31 35 19 Geosynthetic Slope Protection
- 31 37 00 Riprap

Division 32 – Exterior Improvements

- 32 92 19 Seeding

5. FINAL EROSION MITIGATION COST ESTIMATE

The total construction costs for Erosion Mitigation activities in 2011 are currently estimated at approximately $505,000. Appendix F provides a summary of the construction capital costs.

REFERENCES

EA. 2010. Draft Erosion Mitigation Evaluation Report, Imperial Refining Superfund Site, Ardmore, Oklahoma. December.

EPA. 2009. Superfund Record of Decision Amendment Summary, Imperial Refining Company Superfund Site, Ardmore, Oklahoma. February.

HydroCAD Software Solutions LLC. 2006. HydroCAD Stormwater Modeling System, Version 8, Owner's Manual.

Integrated Testing and Engineering Company of DFW Metro, Inc. 2010. Subsurface Exploration and Analysis, Imperial Refining Site at SH-142/Veterans Boulevard, Ardmore, Oklahoma. 21 October.

Tables

TABLE 1
EROSION AREAS

Erosion Area	Poor Soil	High Erosion				Moderate Erosion		Low Erosion				
	12	2	3	8	11	1	7	4	5	6	9	10
Acres	3.3	0.1	0.09	0.3	0.04	1.4	1.1	0.2	0.1	0.1	0.4	0.8

TABLE 2
STORM RAINFALL

Storm Size (Year/24 Hour)	Rainfall* (inches)
100	9.1
25	7.2
10	6.1
5	5.2
2	3.8

Notes: * HydroCAD Owner's Manual, Appendix B4

TABLE 3
DRAINAGE AREAS AND ESTIMATED RUNOFF

Area Designation	Area (SF)	Area (acres)	Estimated Peak Runoff for X year/24 hour Storm (cfs)				
			2 year	5 year	10 year	25 year	100 year
A*	2,622,250	60.2	58.4	102.0	131.6	169.1	234.9
B	569,954	13.1	13.3	23.2	29.9	38.3	53.1
C	428,704	9.8	12.0	20.9	26.9	34.4	47.8
D	476,860	10.9	15.4	26.7	34.3	43.9	60.8
E	238,072	5.5	9.2	16.0	20.5	26.2	36.2
F*	8,150,434	187.1	70.8	125.8	163.4	210.7	294.5
	Total Area	286.6					

*Includes offsite area

Appendix A

Photo Log

Photo 1 – Thick layer of woodchips with no vegetation. Photo taken 6-9-10.

Photo 2 – Erosion, exposed boulders and placed riprap in channel 1. Looking to the West from the bottom of the channel. Photo taken 6-9-10.

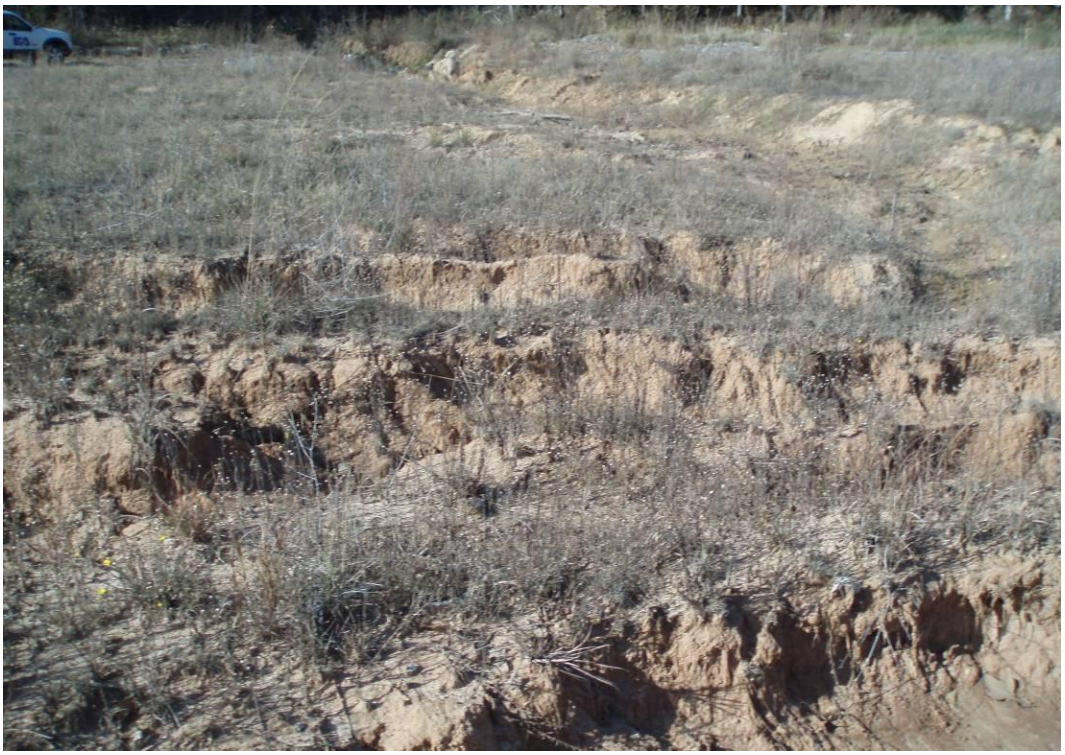

Photo 3 – Rill erosion along channel 2 on the east side of Veterans Boulevard. Area along channel 2 has poor soil and many erosion rills. Looking to the northwest. Photo taken 11-17-10.

Photo 4 – Veteran's Blvd culvert outlet, exposed water pipe (at red arrow), plunge pool and washed out riprap. Looking to the west from Channel 2. Photo taken 5-18-10.

Photo 5 – East Pond concrete drainage structure covered with sediment and plant growth. Photo taken 6-10-10.

Photo 6 – Washout area and exposed abandoned drain line by the east pond. Photo was taken 6-11-10.

Appendix B

Drawings

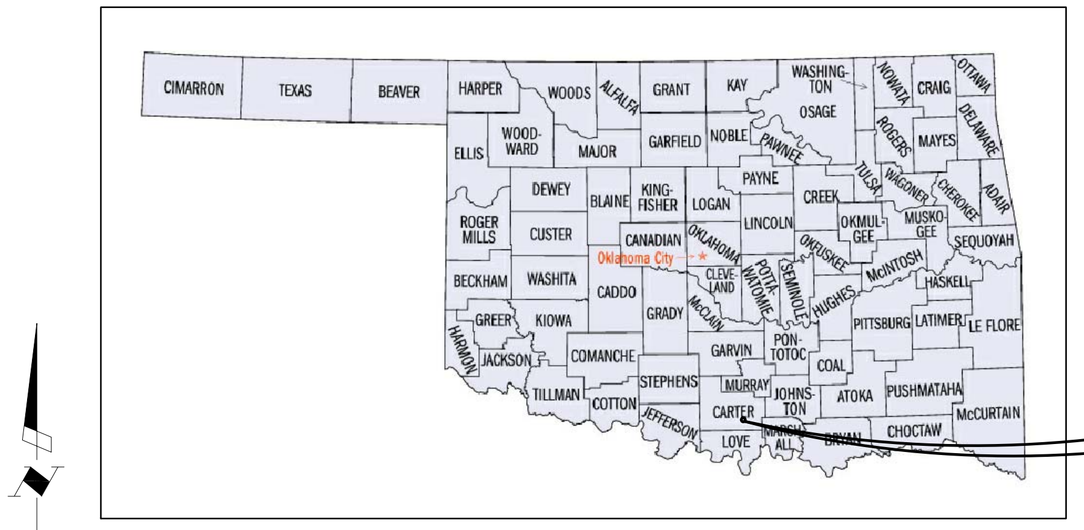

OKLAHOMA MAP

NOT TO SCALE

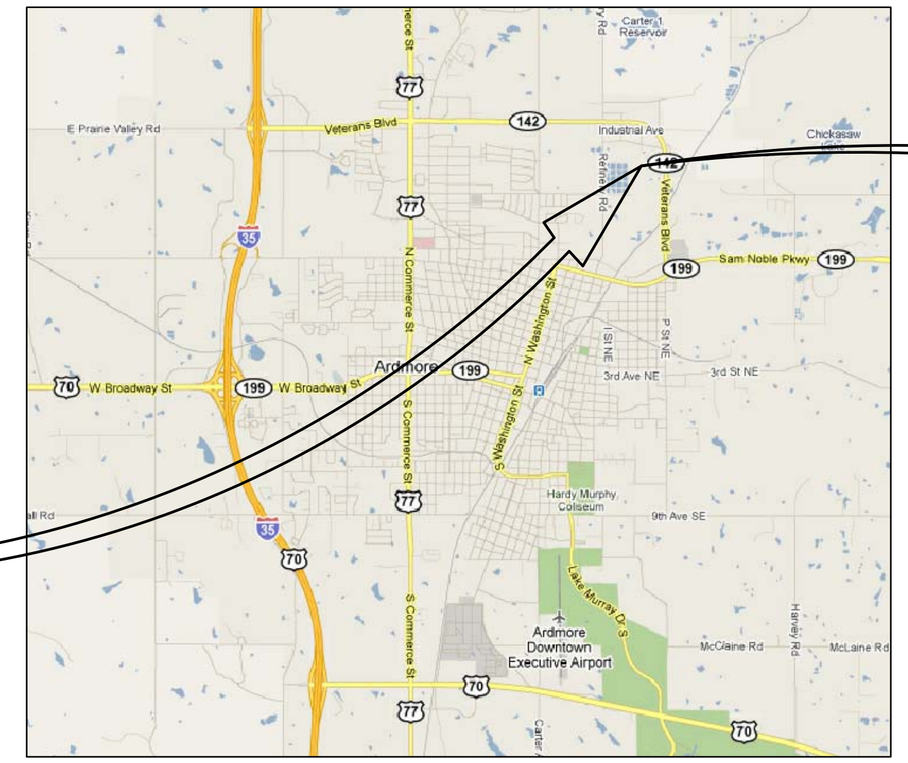

IMAGE SOURCE: GOOGLE MAPS, 2010

LOCAL AREA MAP

NOT TO SCALE

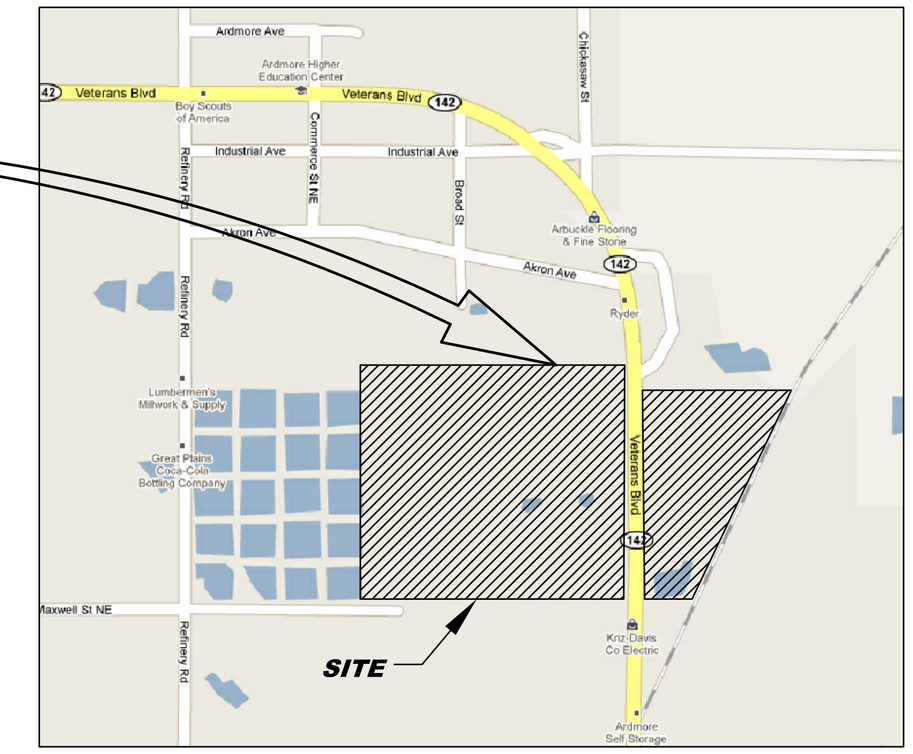

IMAGE SOURCE: GOOGLE MAPS, 2010

VICINITY MAP

NOT TO SCALE

FINAL EROSION MITIGATION DESIGN
IMPERIAL REFINING SUPERFUND SITE
OPERATIONAL AND FUNCTIONAL ACTIVITIES

ARDMORE, OKLAHOMA

PREPARED FOR
EPA REGION 6
DALLAS, TEXAS

REVISIONS

NO.	DATE	BY

SEAL

REGISTERED PROFESSIONAL ENGINEER THEODORE TELSAK 19532 OKLAHOMA

IMPERIAL REFINING SUPERFUND SITE
OPERATIONAL AND FUNCTIONAL ACTIVITIES
EPA REGION 6
ARDMORE, OKLAHOMA

COVER SHEET

PREPARED FOR:

EPA

EA ENGINEERING, SCIENCE, AND TECHNOLOGY
405 S. HIGHWAY 121
BUILDING C, SUITE 100
LEWISVILLE, TEXAS 75067
(972) 315-3922
OKLAHOMA CERTIFICATION OF AUTHORIZATION NO. 3026

DATE	AUGUST 2011
DESIGNED BY	LLR
DRAWN BY	JRM
CHECKED BY	TT
PROJECT MANAGER	BY
PROJECT NUMBER	14342.39
SCALE	AS SHOWN
FILE NAME	COVER SHEET.dwg
DRAWING NUMBER	T-1
SHEET NUMBER	1 OF 10

DRAWING NAME: F:\Projects\Dpc Dod\DRA\projects\14342391\Figures\COVER SHEET.dwg
DATE:08/10/2011 TIME:11:00a PLOTTED BY:Brian Bynum

GENERAL CONSTRUCTION NOTES:

1. LIMITS OF CONSTRUCTION ARE AS SHOWN ON THE DRAWINGS.
2. WATER MAY NOT BE PUMPED FROM THE PONDS.
3. CONTRACTOR SHALL LOCATE UNDERGROUND UTILITIES PRIOR TO CONSTRUCTION. CONTRACTOR IS RESPONSIBLE FOR ANY DAMAGE CAUSED TO UNDERGROUND UTILITIES.
4. CONTRACTOR IS RESPONSIBLE FOR CONSTRUCTION IN ACCORDANCE WITH THE DRAWINGS AND SPECIFICATIONS.
5. VEHICULAR TRAFFIC OUTSIDE OF THE LIMITS OF CONSTRUCTION SHALL BE LIMITED TO EXISTING ACCESS ROADS ONLY, UNLESS OTHERWISE APPROVED BY THE ENGINEER.
6. CONTRACTOR SHALL ENTER SITE AT THE CONSTRUCTION ENTRANCES SHOWN ON SHEET 4.
7. SEED AND MULCH DISTURBED AREAS WITHIN LIMITS OF CONSTRUCTION.
8. SITE CONDITIONS MAY VARY FROM THOSE ON THE PLANS. CONTRACTOR IS RESPONSIBLE TO VERIFY CONDITIONS IN THE FIELD PRIOR TO START OF WORK. WHERE FIELD CONDITIONS CONFLICT WITH THE PLAN SET, THE CONTRACTOR SHALL NOTIFY THE ENGINEER.
9. THE CONTRACTOR SHALL BE RESPONSIBLE FOR CONSTRUCTION STAKING AND A FINAL AS-BUILT SURVEY OF FINISHED GRADES AS REQUIRED IN THE TECHNICAL SPECIFICATIONS.
10. TREE LOCATIONS ARE APPROXIMATE. LINES SHOWN ARE THE EDGE OF TREE CANOPY.
11. INSTALL TEMPORARY STORM WATER POLLUTION CONTROLS IN ACCORDANCE WITH ENGINEER APPROVED SWPPP, AND SPECIFICATIONS.
12. SLOPES HORIZONTAL:VERTICAL.
13. CONTROL POINTS ON SITE MUST BE PROTECTED AND/OR REPLACED PER SPECIFICATIONS.
14. LIST OF SUBMITTALS:
    - 14.1. BID FORM
    - 14.2. RECORD DOCUMENTS
    - 14.3. SAMPLES
    - 14.4. MATERIALS SOURCE
    - 14.5. GEOTECHNICAL TESTING
    - 14.6. GEOTEXTILE PRODUCT DATA
    - 14.7. INSTALLER QUALIFICATION
    - 14.8. COCONUT FIBER BLANKET PRODUCT DATA
    - 14.9. TRM/FGM ARMOR PRODUCT DATA
    - 14.10. RIPRAP PRODUCT DATA
    - 14.11. GROUT PRODUCT DATA
    - 14.12. SEED PRODUCT DATA

INFORMATION SOURCE NOTES:

1. SURFACE CONTOURS BASED ON SURVEYING CONDUCTED BY EA ENGINEERING, SCIENCE AND TECHNOLOGY FROM 6 JULY 2010 TO 10 JULY 2010.
2. HORIZONTAL DATUM IS OKLAHOMA SOUTH ZONE STATE PLANE NAD83 AND VERTICAL DATUM IS NAVD88.
3. EROSION AREAS WERE DETERMINED BY EA ENGINEERING DURING A SITE VISIT ON 17 NOVEMBER 2010.

ABBREVIATIONS

CP	CONTROL POINT
EA	EA ENGINEERING, SCIENCE, AND TECHNOLOGY
ELEV	ELEVATION
EPA	ENVIRONMENTAL PROTECTION AGENCY
EOW	EDGE OF WATER
FGM	FLEXIBLE GROWTH MEDIUM
FO	FIBER OPTIC LINE
GAS	GAS LINE
GIS	GEOGRAPHIC INFORMATION SYSTEMS
HIGH	HIGH EROSION AREA
HYD	HYDRANT
LOC	LIMITS OF CONSTRUCTION
LOW	LOW EROSION AREA
MOD	MODERATE EROSION AREA
NAD83	NORTH AMERICAN DATUM 1983
NAVD88	NORTH AMERICAN VERTICAL DATUM 1988
OE	OVERHEAD ELECTRIC
POOR	POOR SOIL AREA
SF	SILT FENCE
TRM	TURF REINFORCEMENT MAT

LEGEND

GRAPHIC SYMBOL	DESCRIPTION
272 / 270	EXISTING GROUND SURFACE CONTOUR
272 / 270	PROPOSED GROUND SURFACE CONTOUR
	EXISTING POWER POLES
	EXISTING SIGN
	CONTROL POINT LOCATION
	EXISTING TREES (EDGE OF CANOPY)
	EXISTING RAILROAD TRACKS
SF	EXISTING SILT FENCE
X	EXISTING FENCE
OE	EXISTING OVERHEAD POWER LINES
GAS	EXISTING GAS LINE
FO	EXISTING FIBER OPTIC LINE
	STORM WADDLE
=>	FLOWLINE
EOW	EDGE OF WATER
	FLOW DIRECTION
	WOODCHIPS
	EXISTING RIPRAP
	PROPOSED GROUTED RIPRAP
	PROPOSED RIPRAP
	CONCRETE
	GRAVEL DRIVE
POOR	POOR SOIL AREA
LOW	LOW EROSION AREA
MOD	MODERATE EROSION AREA
HIGH	HIGH EROSION AREA
SF	PROPOSED SILT FENCE
	PROPOSED ACCESS ROUTE
LOC	PROPOSED LIMITS OF CONSTRUCTION
	PROPOSED TOPSOIL
	PROPOSED IMPORTED CLEAN CLAY
	COCONUT FIBER BLANKET
	TRM/FGM ARMOR
x40	CONSTRUCTION STAKING
818.0	EXISTING GRADE ELEVATION (SECTION)
816.9	PROPOSED GRADE ELEVATION (SECTION)

13 — DETAIL NUMBER
4 | 12 — SHEET NUMBER OF DETAIL; SHEET WHERE DETAIL IS REFERENCED

NOTES:

1. "A" INDICATES THAT A SECTION, DETAIL, SCHEMATIC, OR DIAGRAM IS DRAWN ON SAME SHEET.
2. IF THE SECTION, DETAIL, SCHEMATIC, OR DIAGRAM IS REFERENCED ON MULTIPLE SHEETS, ALL SHEETS ARE REFERENCED WITHIN THE DETAIL BUBBLE.

INDEX:

DRAWING NO.	SHEET NO.	TITLE
T-1	1	COVER SHEET
G-1	2	GENERAL NOTES AND CONTROL POINTS
C-1	3	EXISTING CONDITIONS
C-2	4	SITE LAYOUT INDEX
C-3	5	PROPOSED IMPROVEMENTS-SOUTHWEST
C-4	6	PROPOSED IMPROVEMENTS-NORTHWEST
C-5	7	PROPOSED IMPROVEMENTS-EAST
C-6	8	CHANNEL CROSS SECTIONS
C-7	9	EROSION AREA CROSS SECTIONS
C-8	10	DETAILS

CONTROL POINTS

POINT NO.	NORTHING	EASTING	ELEVATION	DESCRIPTION
EA1	315,976.21	2,238,277.10	822.46	#4 REBAR
EA2	315,648.28	2,238,131.10	820.13	#4 REBAR
EA3	314,976.69	2,238,120.13	816.85	#4 REBAR
EA4	314,953.23	2,238,220.54	815.25	#4 REBAR
EA5	314,754.18	2,238,199.02	821.29	PIN ON GUARDRAIL POST
EA6	315,199.12	2,237,504.87	833.68	#4 REBAR
EA7	315,817.21	2,236,946.64	845.30	#4 REBAR
EA8	315,151.84	2,236,900.70	836.82	#4 REBAR
EA9	315,160.09	2,238,569.02	811.71	#4 REBAR
EA10	315,748.58	2,238,656.09	803.02	#4 REBAR

CONTROL POINT TIES

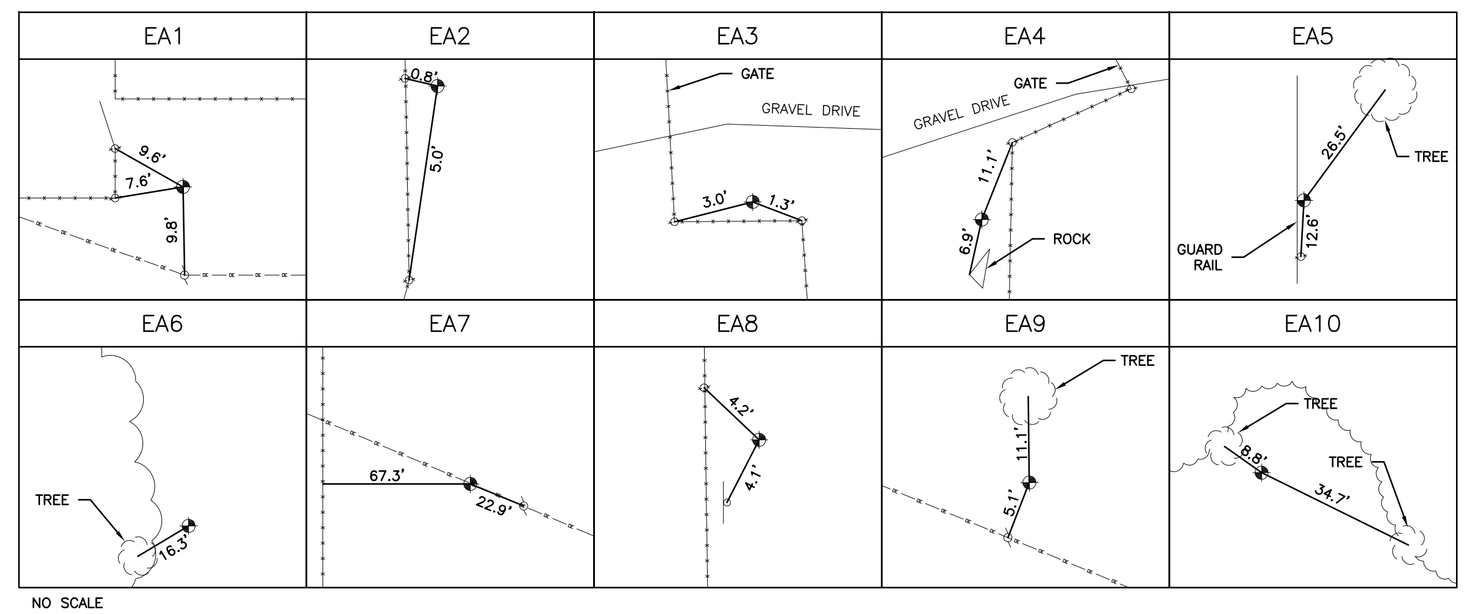

NO SCALE

REVISIONS

NO.	DATE	BY

SEAL

REGISTERED PROFESSIONAL ENGINEER — THEODORE TELSAK — 19532 — OKLAHOMA

IMPERIAL REFINING SUPERFUND SITE
OPERATIONAL AND FUNCTIONAL ACTIVITIES
EPA REGION 6
ARDMORE, OKLAHOMA

GENERAL NOTES AND CONTROL POINTS

PREPARED FOR:

EPA

EA ENGINEERING, SCIENCE, AND TECHNOLOGY
405 S. HIGHWAY 121
BUILDING C, SUITE 100
LEWISVILLE, TEXAS 75067
(972) 315-3922
OKLAHOMA CERTIFICATION OF AUTHORIZATION NO. 3026

DATE	AUGUST 2011
DESIGNED BY	LLR
DRAWN BY	JRM
CHECKED BY	TT
PROJECT MANAGER	BY
PROJECT NUMBER	14342.39
SCALE	AS SHOWN
FILE NAME	GENERAL NOTES AND LEGEND.dwg
DRAWING NUMBER	G-1
SHEET NUMBER	2 OF 10

DRAWING NAME: F:\Famp\Ops Doc\GIS\projects\14342.39\Figures\GENERAL NOTES AND LEGEND.dwg
DATE:08/31/2011 TIME:10:00 BY:Brian_Yarborough

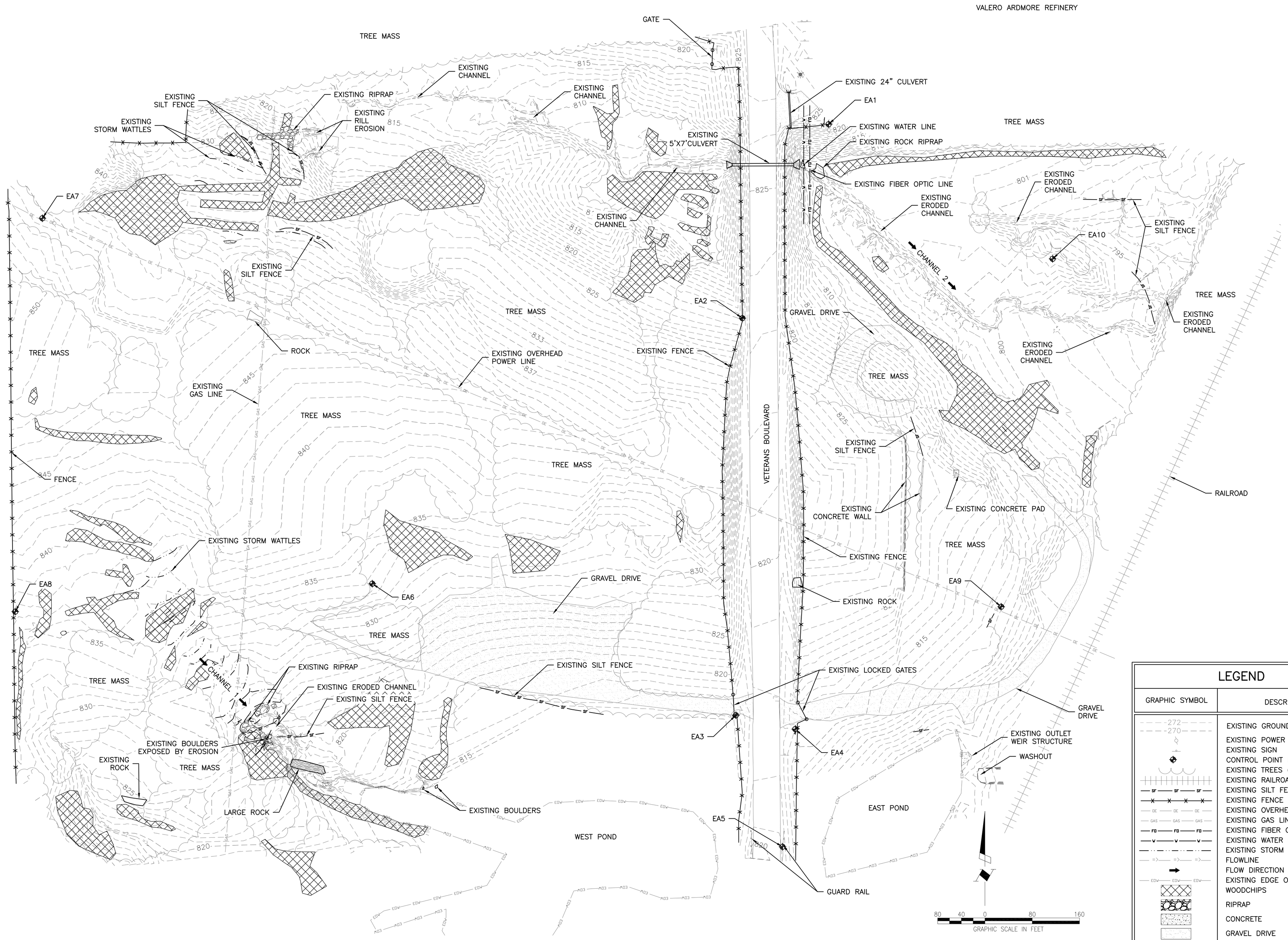

LEGEND

GRAPHIC SYMBOL	DESCRIPTION
272 / 270	EXISTING GROUND SURFACE CONTOUR
	EXISTING POWER POLES
	EXISTING SIGN
	CONTROL POINT LOCATION
	EXISTING TREES (EDGE OF CANOPY)
	EXISTING RAILROAD TRACKS
SF	EXISTING SILT FENCE
X	EXISTING FENCE
OE	EXISTING OVERHEAD POWER LINES
GAS	EXISTING GAS LINE
FO	EXISTING FIBER OPTIC LINE
V	EXISTING WATER LINE
	EXISTING STORM WADDLE
	FLOWLINE
	FLOW DIRECTION
EDV	EXISTING EDGE OF WATER
	WOODCHIPS
	RIPRAP
	CONCRETE
	GRAVEL DRIVE

REVISIONS

NO.	DATE	BY

SEAL

REGISTERED PROFESSIONAL ENGINEER THEODORE TELSAK 19532 OKLAHOMA

IMPERIAL REFINING SUPERFUND SITE
OPERATIONAL AND FUNCTIONAL ACTIVITIES
EPA REGION 6
ARDMORE, OKLAHOMA

EXISTING CONDITIONS

PREPARED FOR:

EPA

EA ENGINEERING, SCIENCE, AND TECHNOLOGY
405 S. HIGHWAY 121
BUILDING C, SUITE 100
LEWISVILLE, TEXAS 75067
(972) 315-3922
OKLAHOMA CERTIFICATION OF AUTHORIZATION NO. 3026

DATE	AUGUST 2011
DESIGNED BY	LLR
DRAWN BY	JRM
CHECKED BY	TT
PROJECT MANAGER	BY
PROJECT NUMBER	14342.39
SCALE	AS SHOWN
FILE NAME	EXISTING CONDITIONS.dwg
DRAWING NUMBER	C-1
SHEET NUMBER	3 OF 10

DRAWING NAME: F:\Projects\Imp. Ref\EPA\projects\14342.39\Figures\EXISTING CONDITIONS.dwg
DATE: Feb 10, 2011 - 7:46pm, TTELSAK

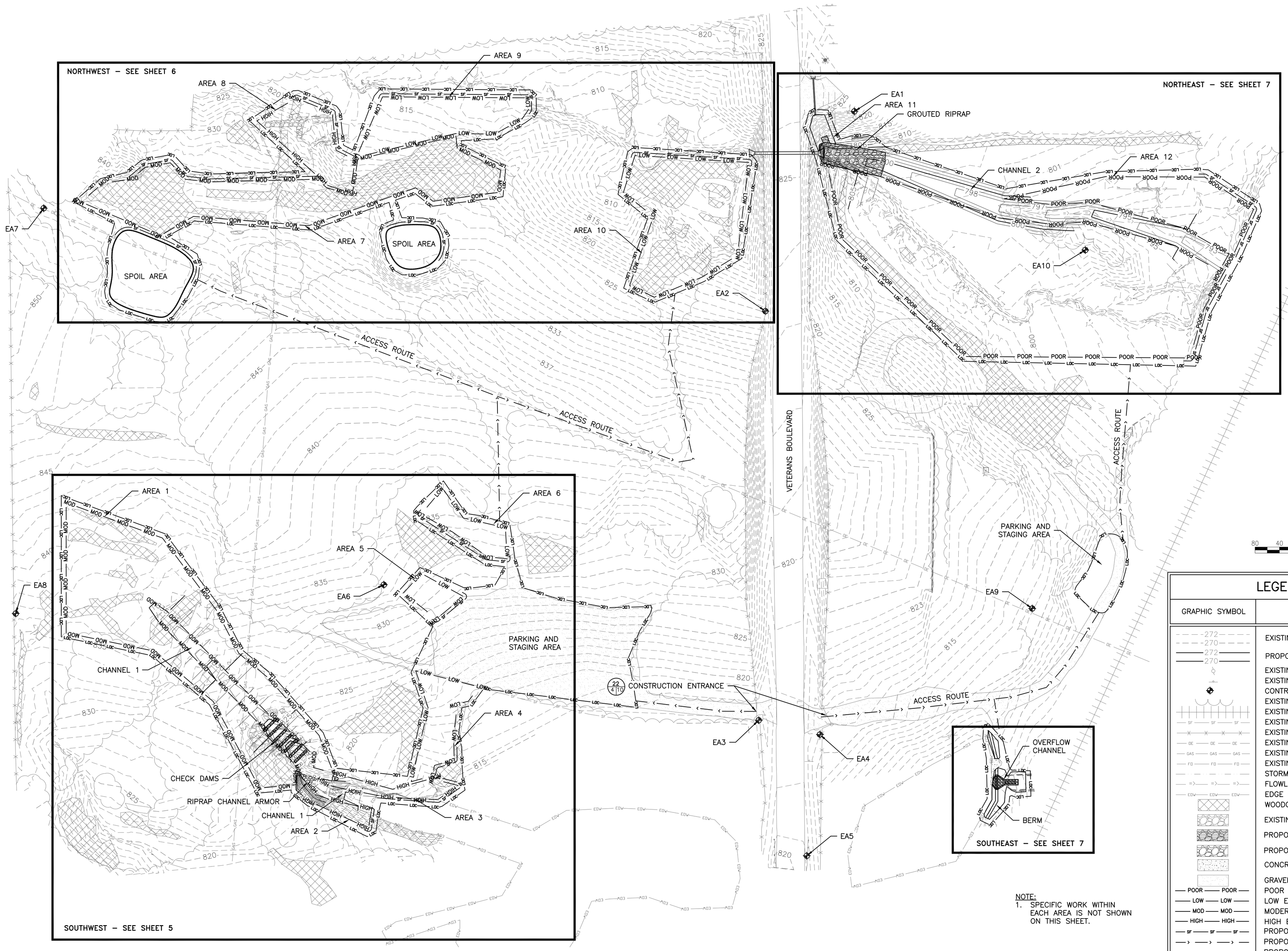

NOTE:
1. SPECIFIC WORK WITHIN EACH AREA IS NOT SHOWN ON THIS SHEET.

LEGEND

GRAPHIC SYMBOL	DESCRIPTION
272 / 270	EXISTING GROUND SURFACE CONTOUR
272 / 270	PROPOSED GROUND SURFACE CONTOUR
	EXISTING POWER POLES
	EXISTING SIGN
	CONTROL POINT LOCATION
	EXISTING TREES (EDGE OF CANOPY)
	EXISTING RAILROAD TRACKS
SF	EXISTING SILT FENCE
X	EXISTING FENCE
DE	EXISTING OVERHEAD POWER LINES
GAS	EXISTING GAS LINE
FO	EXISTING FIBER OPTIC LINE
	STORM WADDLE
	FLOWLINE
EDW	EDGE OF WATER
	WOODCHIPS
	EXISTING RIPRAP
	PROPOSED GROUTED RIPRAP
	PROPOSED RIPRAP
	CONCRETE
	GRAVEL DRIVE
POOR	POOR SOIL AREA
LOW	LOW EROSION AREA
MOD	MODERATE EROSION AREA
HIGH	HIGH EROSION AREA
SF	PROPOSED SILT FENCE
	PROPOSED ACCESS ROUTE
LOC	PROPOSED LIMITS OF CONSTRUCTION

REVISIONS

NO.	DATE	BY

SEAL

REGISTERED PROFESSIONAL ENGINEER THEODORE TELSAK 19352 OKLAHOMA

IMPERIAL REFINING SUPERFUND SITE
OPERATIONAL AND FUNCTIONAL ACTIVITIES
EPA REGION 6
ARDMORE, OKLAHOMA

SITE LAYOUT INDEX

PREPARED FOR:

EPA

EA ENGINEERING, SCIENCE, AND TECHNOLOGY
405 S. HIGHWAY 121
BUILDING C, SUITE 100
LEWISVILLE, TEXAS 75067
(972) 315-3922
OKLAHOMA CERTIFICATION OF AUTHORIZATION NO. 3026

DATE	AUGUST 2011
DESIGNED BY	LLR
DRAWN BY	JRM
CHECKED BY	TT
PROJECT MANAGER	BY
PROJECT NUMBER	14342.39
SCALE	AS SHOWN
FILE NAME	SITE LAYOUT INDEX.dwg
DRAWING NUMBER	C-2
SHEET NUMBER	4 OF 10

DRAWING NAME: F:\Projects\Tech Docs\EPA projects\14342.39\Figures\SITE LAYOUT INDEX.dwg
DATE:08/30/2011 TIME:1:16pm USER:JRMARTIN

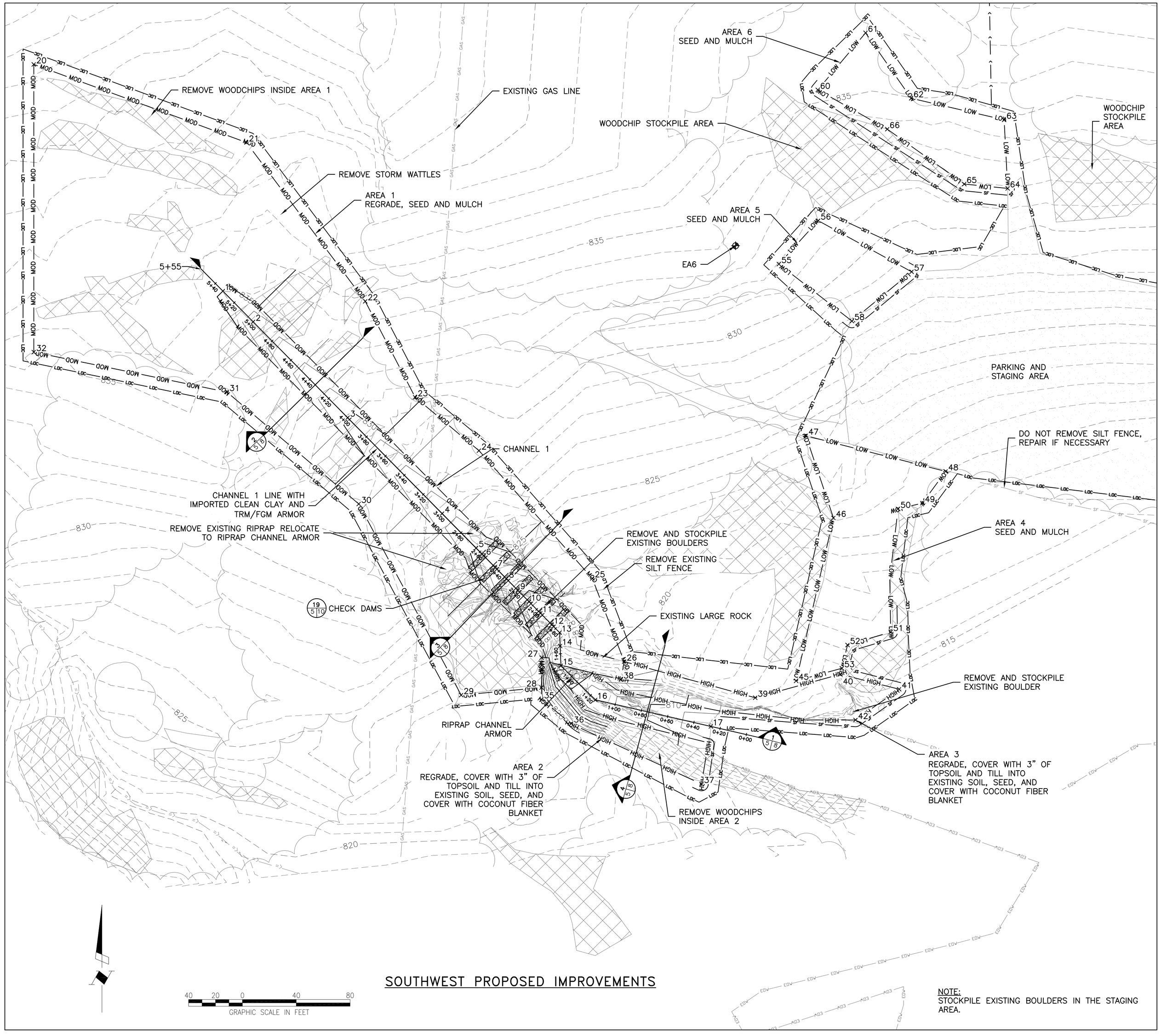

SOUTHWEST PROPOSED IMPROVEMENTS

NOTE:
STOCKPILE EXISTING BOULDERS IN THE STAGING AREA.

CONSTRUCTION STAKING

POINT NO.	NORTHING	EASTING	ELEVATION	DESCRIPTION
1	315,165.46	2,237,123.97	835.00	CHANNEL 1 CENTERLINE
2	315,142.62	2,237,146.49	833.80	CHANNEL 1 CENTERLINE
3	315,071.41	2,237,216.70	830.10	CHANNEL 1 CENTERLINE
4	315,000.21	2,237,286.91	826.30	CHANNEL 1 CENTERLINE
5	314,974.58	2,237,312.18	825.00	CHANNEL 1 CENTERLINE
6	314,968.88	2,237,317.80	824.20	CHANNEL 1 CENTERLINE
7	314,960.33	2,237,326.23	823.00	CHANNEL 1 CENTERLINE
8	314,951.79	2,237,334.65	821.80	CHANNEL 1 CENTERLINE
9	314,943.24	2,237,343.08	820.60	CHANNEL 1 CENTERLINE
10	314,934.70	2,237,351.50	819.40	CHANNEL 1 CENTERLINE
11	314,925.15	2,237,359.93	818.20	CHANNEL 1 CENTERLINE
12	314,917.61	2,237,368.35	817.00	CHANNEL 1 CENTERLINE
13	314,911.72	2,237,374.16	816.90	CHANNEL 1 CENTERLINE
14	314,901.81	2,237,374.55	816.70	CHANNEL 1 CENTERLINE
15	314,887.17	2,237,375.13	813.00	CHANNEL 1 CENTERLINE
16	314,861.76	2,237,400.68	811.60	CHANNEL 1 CENTERLINE
17	314,842.05	2,237,486.53	808.20	CHANNEL 1 CENTERLINE
20	315,333.85	2,236,983.49	-	AREA 1
21	315,275.87	2,237,141.43	-	AREA 1
22	315,157.86	2,237,229.75	-	AREA 1
23	315,086.53	2,237,266.84	-	AREA 1
24	315,046.93	2,237,314.22	-	AREA 1
25	314,952.02	2,237,398.44	-	AREA 1
26	314,890.19	2,237,422.13	-	AREA 1
27	314,893.12	2,237,360.74	-	AREA 1
28	314,870.90	2,237,360.74	-	AREA 1
29	314,865.31	2,237,301.01	-	AREA 1
30	315,007.31	2,237,224.92	-	AREA 1
31	315,090.42	2,237,127.05	-	AREA 1
32	315,120.13	2,236,983.49	-	AREA 1
35	314,862.09	2,237,360.74	-	AREA 2
36	314,844.14	2,237,382.82	-	AREA 2
37	314,799.23	2,237,479.57	-	AREA 2
38	314,875.88	2,237,419.75	-	AREA 3
39	314,863.36	2,237,519.48	-	AREA 3
40	314,880.79	2,237,582.74	-	AREA 3
41	314,869.68	2,237,626.41	-	AREA 3
42	314,846.82	2,237,593.96	-	AREA 3
45	314,875.88	2,237,549.86	-	AREA 4
46	314,996.94	2,237,577.58	-	AREA 4
47	315,057.98	2,237,557.13	-	AREA 4
48	315,031.50	2,237,660.99	-	AREA 4
49	315,007.89	2,237,643.62	-	AREA 4
50	315,003.63	2,237,625.56	-	AREA 4
51	314,912.17	2,237,620.14	-	AREA 4
52	314,902.53	2,237,588.07	-	AREA 4
53	314,885.23	2,237,583.83	-	AREA 4
55	315,185.51	2,237,537.08	-	AREA 5
56	315,217.76	2,237,566.26	-	AREA 5
57	315,179.81	2,237,635.65	-	AREA 5
58	315,143.21	2,237,591.28	-	AREA 5
60	315,314.92	2,237,565.97	-	AREA 6
61	315,357.28	2,237,601.47	-	AREA 6
62	315,308.68	2,237,635.35	-	AREA 6
63	315,292.67	2,237,704.42	-	AREA 6
64	315,241.72	2,237,707.04	-	AREA 6
65	315,244.96	2,237,674.81	-	AREA 6
66	315,285.75	2,237,617.59	-	AREA 6

LEGEND

GRAPHIC SYMBOL	DESCRIPTION
272	EXISTING GROUND SURFACE CONTOUR
272	PROPOSED GROUND SURFACE CONTOUR
	EXISTING POWER POLES
	EXISTING SIGN
	CONTROL POINT LOCATION
	EXISTING TREES (EDGE OF CANOPY)
	EXISTING RAILROAD TRACKS
SF	EXISTING SILT FENCE
X	EXISTING FENCE
OE	EXISTING OVERHEAD POWER LINES
GAS	EXISTING GAS LINE
FO	EXISTING FIBER OPTIC LINE
	STORM WADDLE
	FLOWLINE
EDV	EDGE OF WATER
	WOODCHIPS
	EXISTING RIPRAP
	PROPOSED RIPRAP
	CONCRETE
	GRAVEL DRIVE
POOR	POOR SOIL AREA
LOW	LOW EROSION AREA
MOD	MODERATE EROSION AREA
HIGH	HIGH EROSION AREA
SF	PROPOSED SILT FENCE
	PROPOSED ACCESS ROUTE
LOC	PROPOSED LIMITS OF CONSTRUCTION
x40	CONSTRUCTION STAKING

REVISIONS

NO.	DATE	BY

SEAL

REGISTERED PROFESSIONAL ENGINEER THEODORE TELSAK 19532 OKLAHOMA

IMPERIAL REFINING SUPERFUND SITE
OPERATIONAL AND FUNCTIONAL ACTIVITIES
EPA REGION 6
ARDMORE, OKLAHOMA

PROPOSED IMPROVEMENTS–SOUTHWEST

PREPARED FOR:

EPA

EA ENGINEERING, SCIENCE, AND TECHNOLOGY
405 S. HIGHWAY 121
BUILDING C, SUITE 100
LEWISVILLE, TEXAS 75067
(972) 315-3922
OKLAHOMA CERTIFICATION OF AUTHORIZATION NO. 3026

DATE	AUGUST 2011
DESIGNED BY	LLR
DRAWN BY	JRM
CHECKED BY	TT
PROJECT MANAGER	BY
PROJECT NUMBER	14342.39
SCALE	AS SHOWN
FILE NAME	PROPOSED CONDITIONS–SOUTHWEST.dwg
DRAWING NUMBER	C–3
SHEET NUMBER	5 OF 10

DRAWING NAME: F:\Projects\Ops Tech\EPA projects\14342.39\Figures\PROPOSED CONDITIONS-SOUTHWEST.dwg
DATE:08/30/2011 TIME:10:00 AM USER:JRMARTIN

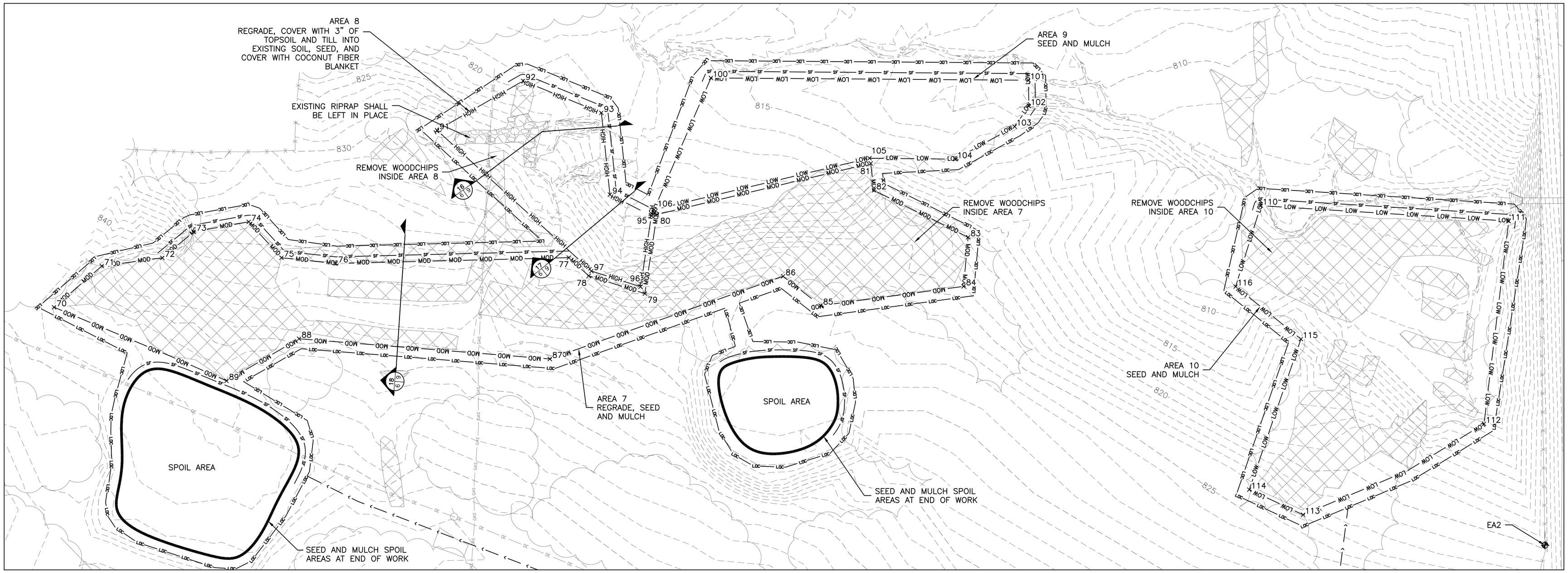

NORTHWEST PROPOSED IMPROVEMENTS

40 20 0 40 80
GRAPHIC SCALE IN FEET

CONSTRUCTION STAKING

POINT NO.	NORTHING	EASTING	ELEVATION	DESCRIPTION
70	315,827.42	2,237,007.83	-	AREA 7
71	315,858.49	2,237,043.78	-	AREA 7
72	315,864.63	2,237,089.36	-	AREA 7
73	315,884.29	2,237,113.16	-	AREA 7
74	315,891.77	2,237,154.50	-	AREA 7
75	315,864.74	2,237,179.15	-	AREA 7
76	315,860.39	2,237,220.01	-	AREA 7
77	315,864.79	2,237,395.65	-	AREA 7
78	315,851.14	2,237,410.63	-	AREA 7
79	315,837.72	2,237,452.93	-	AREA 7
80	315,897.29	2,237,462.02	-	AREA 7
81	315,935.79	2,237,623.09	-	AREA 7
82	315,915.50	2,237,625.51	-	AREA 7
83	315,880.16	2,237,696.47	-	AREA 7
84	315,843.18	2,237,693.06	-	AREA 7
85	315,828.67	2,237,585.36	-	AREA 7
86	315,850.73	2,237,557.09	-	AREA 7
87	315,788.52	2,237,381.32	-	AREA 7
88	315,803.75	2,237,192.39	-	AREA 7
89	315,772.04	2,237,137.73	-	AREA 7
91	315,960.67	2,237,296.37	-	AREA 8
92	315,997.86	2,237,361.22	-	AREA 8
93	315,973.82	2,237,420.17	-	AREA 8
94	315,912.27	2,237,426.60	-	AREA 8
95	315,896.28	2,237,457.82	-	AREA 8
96	315,842.95	2,237,449.68	-	AREA 8
97	315,854.69	2,237,412.67	-	AREA 8
100	316,000.09	2,237,502.70	-	AREA 9
101	315,998.39	2,237,741.87	-	AREA 9
102	315,978.99	2,237,742.22	-	AREA 9
103	315,963.51	2,237,731.51	-	AREA 9
104	315,938.96	2,237,686.93	-	AREA 9
105	315,939.68	2,237,622.16	-	AREA 9
106	315,900.87	2,237,459.80	-	AREA 9
110	315,903.92	2,237,916.97	-	AREA 10
111	315,892.35	2,238,103.77	-	AREA 10
112	315,739.65	2,238,085.13	-	AREA 10
113	315,671.21	2,237,948.85	-	AREA 10
114	315,690.15	2,237,908.33	-	AREA 10
115	315,803.51	2,237,947.21	-	AREA 10
116	315,843.07	2,237,898.02	-	AREA 10

LEGEND

GRAPHIC SYMBOL	DESCRIPTION
272	EXISTING GROUND SURFACE CONTOUR
270	
272	PROPOSED GROUND SURFACE CONTOUR
270	
	EXISTING POWER POLES
	EXISTING SIGN
	CONTROL POINT LOCATION
	EXISTING TREES (EDGE OF CANOPY)
	EXISTING RAILROAD TRACKS
SF	EXISTING SILT FENCE
X	EXISTING FENCE
OE	EXISTING OVERHEAD POWER LINES
GAS	EXISTING GAS LINE
FO	EXISTING FIBER OPTIC LINE
	STORM WADDLE
=>	FLOWLINE
EDW	EDGE OF WATER
	WOODCHIPS
	EXISTING RIPRAP
	CONCRETE
	GRAVEL DRIVE
POOR	POOR SOIL AREA
LOW	LOW EROSION AREA
MOD	MODERATE EROSION AREA
HIGH	HIGH EROSION AREA
SF	PROPOSED SILT FENCE
>	PROPOSED ACCESS ROUTE
LOC	PROPOSED LIMITS OF CONSTRUCTION
x40	CONSTRUCTION STAKING

REVISIONS

NO.	DATE	BY

SEAL: REGISTERED PROFESSIONAL ENGINEER THEODORE TELSAK 19352 OKLAHOMA

IMPERIAL REFINING SUPERFUND SITE
OPERATIONAL AND FUNCTIONAL ACTIVITIES
EPA REGION 6
ARDMORE, OKLAHOMA

PROPOSED IMPROVEMENTS–NORTHWEST

PREPARED FOR: EPA

EA ENGINEERING, SCIENCE, AND TECHNOLOGY
405 S. HIGHWAY 121
BUILDING C, SUITE 100
LEWISVILLE, TEXAS 75067
(972) 315–3922
OKLAHOMA CERTIFICATION OF AUTHORIZATION NO. 3026

DATE	AUGUST 2011
DESIGNED BY	LLR
DRAWN BY	JRM
CHECKED BY	TT
PROJECT MANAGER	BY
PROJECT NUMBER	14342.39
SCALE	AS SHOWN
FILE NAME	PROPOSED CONDITIONS–NORTHWEST.dwg
DRAWING NUMBER	C–4
SHEET NUMBER	6 OF 10

DRAWING NAME: F:\Projects\Doe\EPA\projects\14342391\Figures\PROPOSED CONDITIONS–NORTHWEST.dwg
DATE:AUG 10,2011 - 1:19pm PLOTTED BY:Brian Yoder

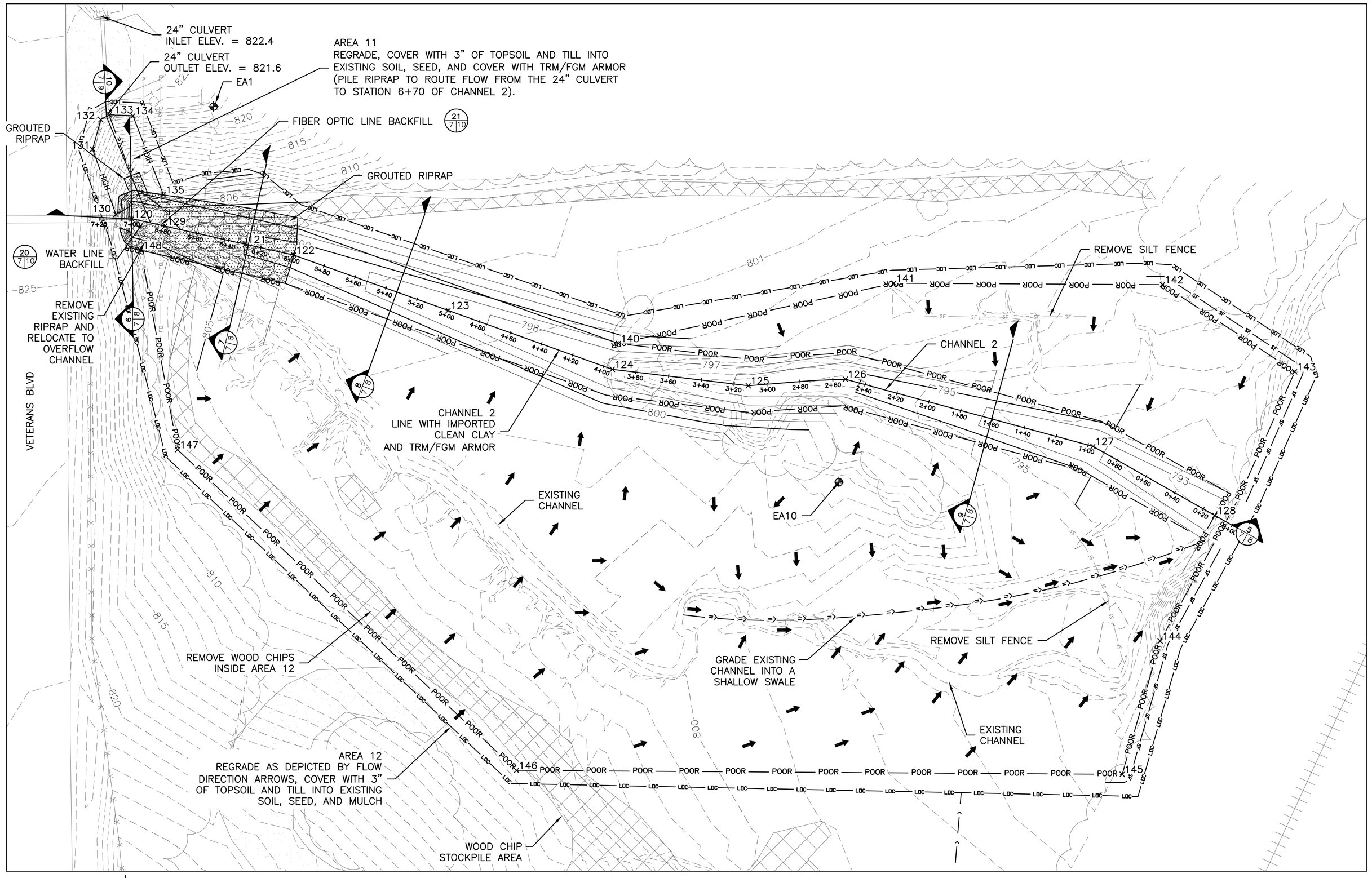

NORTHEAST PROPOSED IMPROVEMENTS

40 20 0 40 80
GRAPHIC SCALE IN FEET

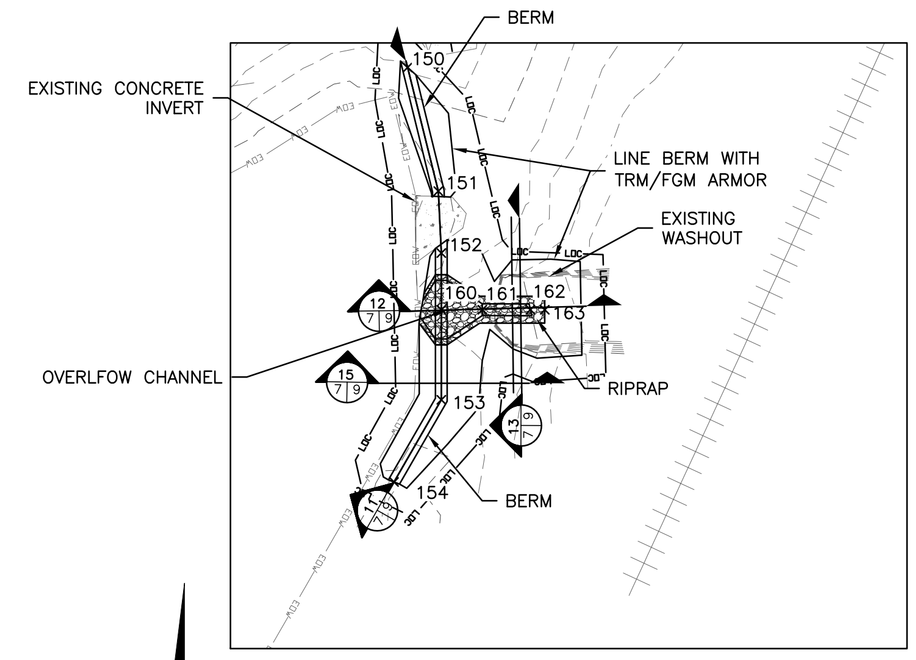

SOUTHEAST PROPOSED IMPROVEMENTS

40 20 0 40 80
GRAPHIC SCALE IN FEET

NOTES:
1. MATERIAL EXCAVATED FROM CHANNEL 2 SHALL BE FILLED INTO THE EXISTING CHANNEL AND POOR SOIL AREA TO PROVIDE STORMWATER FLOW PATHS AS DEPICTED BY ARROWS OR AS DIRECTED BY ENGINEER.
2. IF CONTAMINATED SOILS ARE FOUND DURING EXCAVATION IN THE AREA NEAR EROSION AREA 11, PLACE CONTAMINATED SOIL IN 55 GALLON DRUMS, AND STORE DRUMS IN STAGING AREA FOR OTHERS TO DISPOSE.

CONSTRUCTION STAKING

POINT NO.	NORTHING	EASTING	ELEVATION	DESCRIPTION
120	315,908.11	2,238,227.52	803.40	CHANNEL 2 CENTERLINE
121	315,892.78	2,238,296.42	800.00	CHANNEL 2 CENTERLINE
122	315,886.22	2,238,325.70	799.60	CHANNEL 2 CENTERLINE
123	315,852.62	2,238,419.36	798.30	CHANNEL 2 CENTERLINE
124	315,816.95	2,238,518.78	797.00	CHANNEL 2 CENTERLINE
125	315,807.02	2,238,601.19	795.90	CHANNEL 2 CENTERLINE
126	315,810.94	2,238,660.04	795.40	CHANNEL 2 CENTERLINE
127	315,770.23	2,238,810.08	793.10	CHANNEL 2 CENTERLINE
128	315,728.38	2,238,883.97	792.00	CHANNEL 2 CENTERLINE
129	315,903.73	2,238,247.65	803.40	CHANNEL 2 CENTERLINE
130	315,910.77	2,238,217.96	-	AREA 11
131	315,950.39	2,238,203.81	-	AREA 11
132	315,968.27	2,238,208.76	-	AREA 11
133	315,971.25	2,238,213.92	-	AREA 11
134	315,970.66	2,238,228.26	-	AREA 11
135	315,922.70	2,238,246.70	-	AREA 11
140	315,832.62	2,238,522.49	-	AREA 12
141	315,869.11	2,238,689.40	-	AREA 12
142	315,868.25	2,238,852.23	-	AREA 12
143	315,815.49	2,238,932.38	-	AREA 12
144	315,652.22	2,238,850.81	-	AREA 12
145	315,571.44	2,238,827.82	-	AREA 12
146	315,573.83	2,238,460.69	-	AREA 12
147	315,768.25	2,238,255.31	-	AREA 12
148	315,889.12	2,238,233.00	-	AREA 12
150	314,957.68	2,238,499.16	806.00	BERM CENTERLINE
151	314,915.47	2,238,509.64	806.00	BERM CENTERLINE
152	314,894.30	2,238,510.68	806.00	BERM CENTERLINE
153	314,844.18	2,238,510.68	806.00	BERM CENTERLINE
154	314,816.09	2,238,494.51	806.00	BERM CENTERLINE
160	314,874.93	2,238,510.68	805.00	OVERFLOW CHANNEL CENTERLINE
161	314,874.93	2,238,524.68	802.70	OVERFLOW CHANNEL CENTERLINE
162	314,874.93	2,238,541.11	795.00	OVERFLOW CHANNEL CENTERLINE
163	314,874.93	2,238,546.00	794.00	OVERFLOW CHANNEL CENTERLINE

LEGEND

GRAPHIC SYMBOL	DESCRIPTION
272	EXISTING GROUND SURFACE CONTOUR
272	PROPOSED GROUND SURFACE CONTOUR
	EXISTING POWER POLES
	EXISTING SIGN
	CONTROL POINT LOCATION
	EXISTING TREES (EDGE OF CANOPY)
	EXISTING RAILROAD TRACKS
SF	EXISTING SILT FENCE
X	EXISTING FENCE
OE	EXISTING OVERHEAD POWER LINES
GAS	EXISTING GAS LINE
FO	EXISTING FIBER OPTIC LINE
	STORM WADDLE
=>	FLOWLINE
EOV	EDGE OF WATER
	FLOW DIRECTION
	WOOD CHIPS
	EXISTING RIPRAP
	PROPOSED GROUTED RIPRAP
	CONCRETE
	GRAVEL DRIVE
POOR	POOR SOIL AREA
LOW	LOW EROSION AREA
MOD	MODERATE EROSION AREA
HIGH	HIGH EROSION AREA
SF	PROPOSED SILT FENCE
>	PROPOSED ACCESS ROUTE
LOC	PROPOSED LIMITS OF CONSTRUCTION
x40	CONSTRUCTION STAKING

REVISIONS

NO.	DATE	BY

SEAL: REGISTERED PROFESSIONAL ENGINEER THEODORE TELSAK 19352 OKLAHOMA

IMPERIAL REFINING SUPERFUND SITE
OPERATIONAL AND FUNCTIONAL ACTIVITIES
EPA REGION 6
ARDMORE, OKLAHOMA

PROPOSED IMPROVEMENTS–EAST

PREPARED FOR:
EPA

EA ENGINEERING, SCIENCE, AND TECHNOLOGY
405 S. HIGHWAY 121
BUILDING C, SUITE 100
LEWISVILLE, TEXAS 75067
(972) 315–3922
OKLAHOMA CERTIFICATION OF AUTHORIZATION NO. 3026

DATE	AUGUST 2011
DESIGNED BY	LLR
DRAWN BY	JRM
CHECKED BY	TT
PROJECT MANAGER	BY
PROJECT NUMBER	14342.39
SCALE	AS SHOWN
FILE NAME	PROPOSED IMPROVEMENTS–EAST.dwg
DRAWING NUMBER	C–5
SHEET NUMBER	7 OF 10

DRAWING NAME: F:\Projects\Imp Sup\EPA\projects\14342.39\Figures\PROPOSED IMPROVEMENTS–EAST.dwg
DATE:08/30/2011 TIME:11:06 DRAWN BY:Unknown

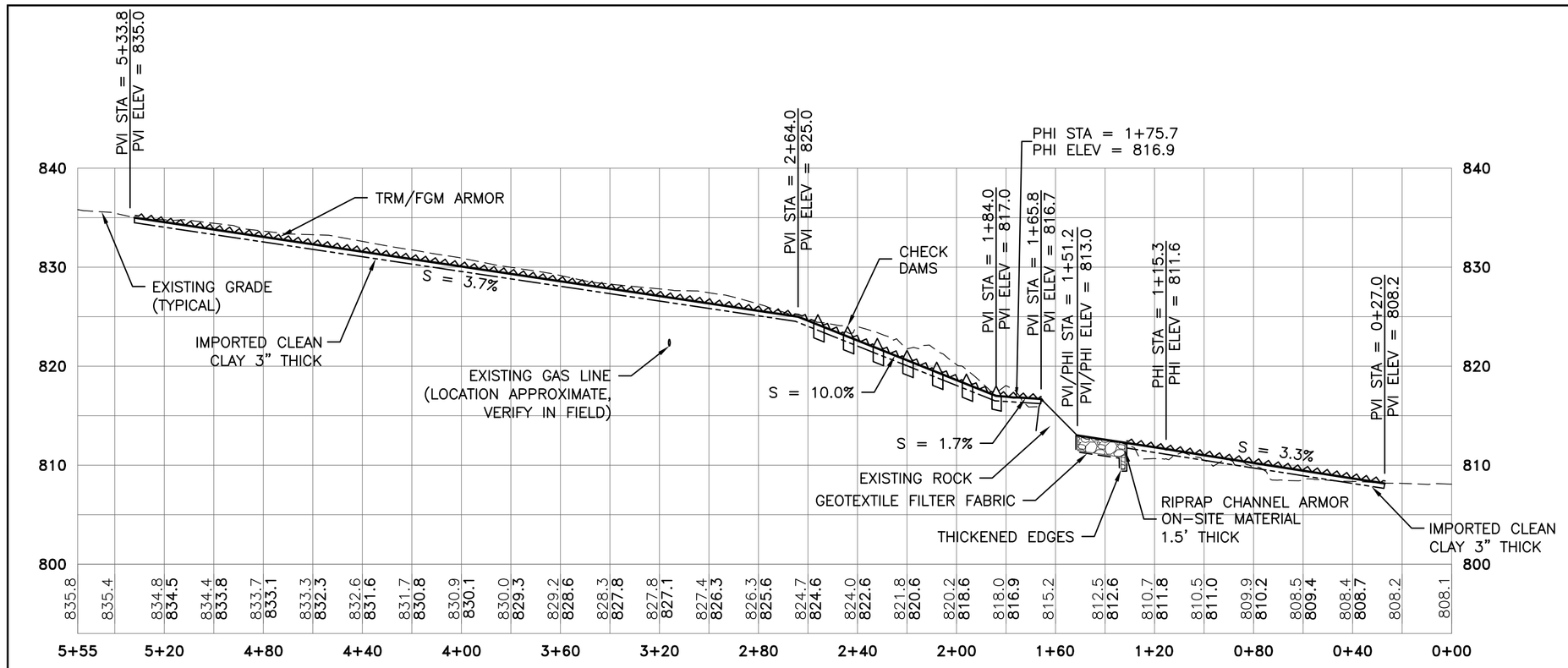

1 5|8 CHANNEL 1 - PROFILE
HORIZONTAL 1"=40'
VERTICAL 1"=10'

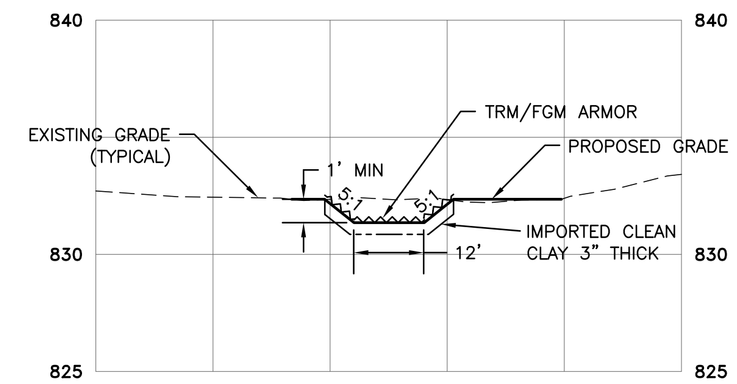

2 5|8 CHANNEL 1 - SECTION
HORIZONTAL 1"=20'
VERTICAL 1"=5'

NOTE:
ON-SITE RIPRAP MATERIAL IS FROM AREAS 1 AND 8 AND IS APPROXIMATELY TYPE A.

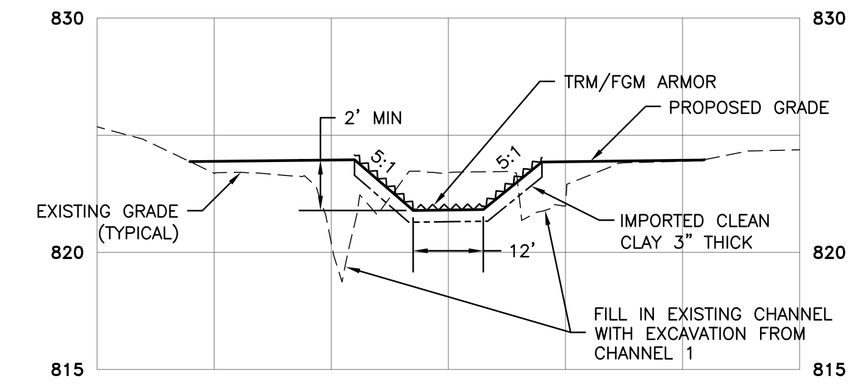

3 5|8 CHANNEL 1 - SECTION
HORIZONTAL 1"=20'
VERTICAL 1"=5'

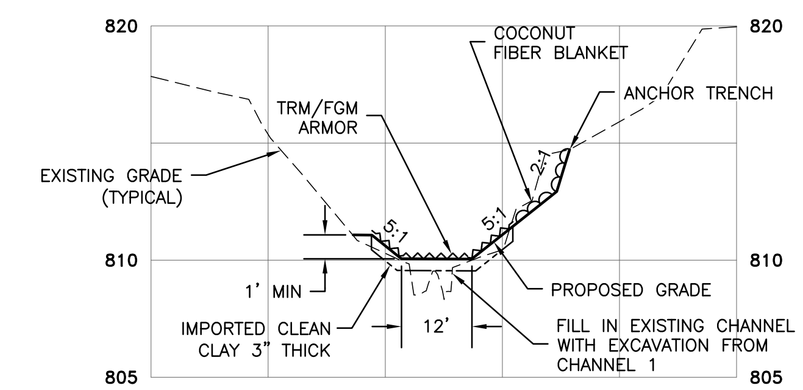

4 5|8 CHANNEL 1 - SECTION
HORIZONTAL 1"=20'
VERTICAL 1"=5'

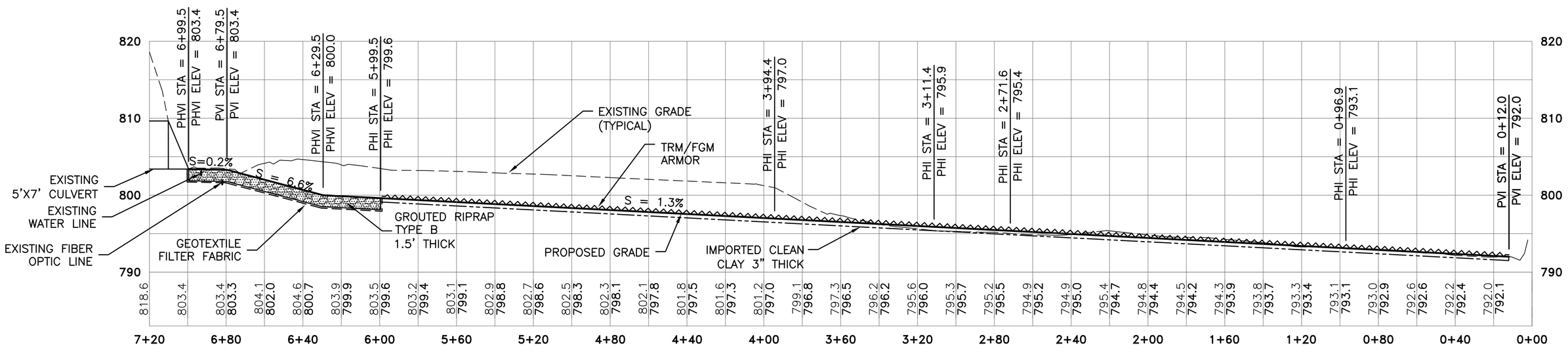

5 7|8 CHANNEL 2 - PROFILE
HORIZONTAL 1"=40'
VERTICAL 1"=10'

LEGEND

GRAPHIC SYMBOL	DESCRIPTION
	EXISTING GRADE
	PROPOSED GRADE
	EXISTING FENCE
	TRM/FGM ARMOR
	COCONUT FIBER BLANKET
	GEOTEXTILE FILTER FABRIC
	PROPOSED IMPORTED CLEAN CLAY
	RIPRAP
	GROUTED RIPRAP
818.0 / 816.9	EXISTING GRADE ELEVATION (SECTION) / PROPOSED GRADE ELEVATION (SECTION)

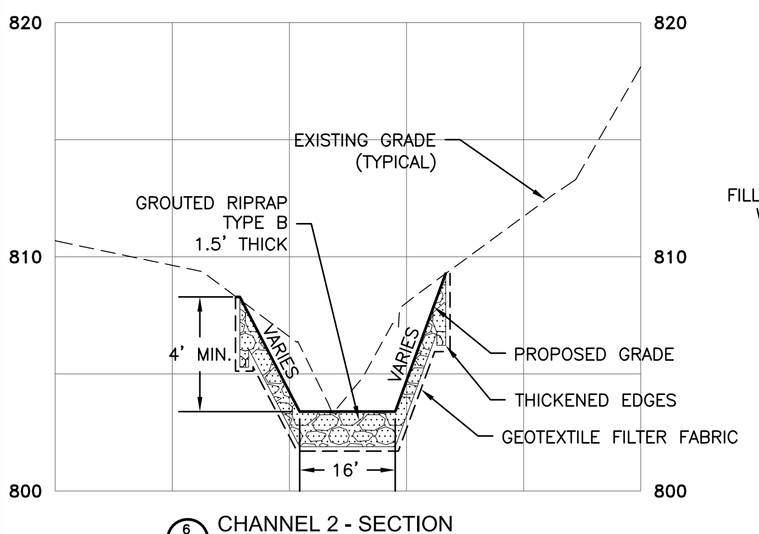

6 7|8 CHANNEL 2 - SECTION
HORIZONTAL 1"=20'
VERTICAL 1"=5'

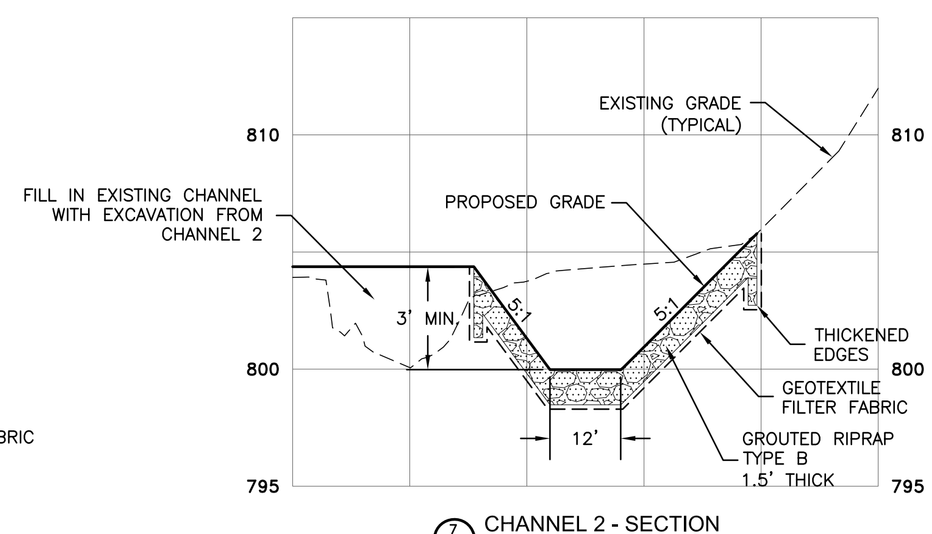

7 7|8 CHANNEL 2 - SECTION
HORIZONTAL 1"=20'
VERTICAL 1"=5'

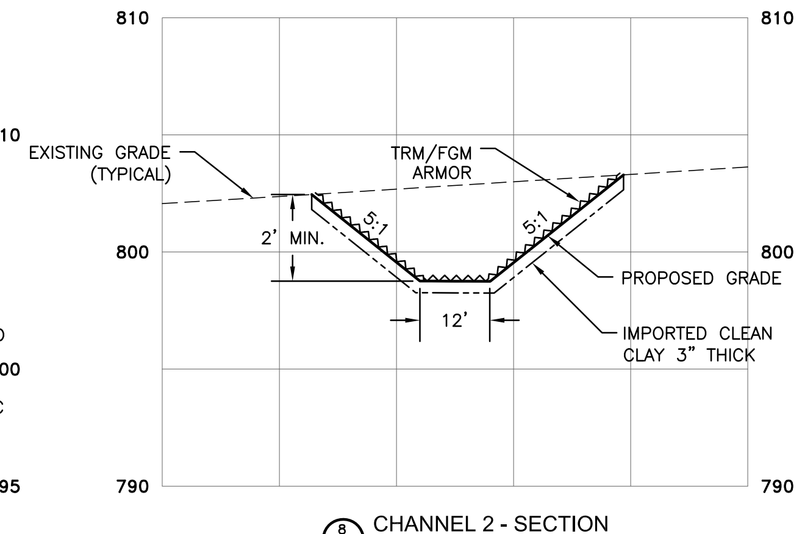

8 7|8 CHANNEL 2 - SECTION
HORIZONTAL 1"=20'
VERTICAL 1"=5'

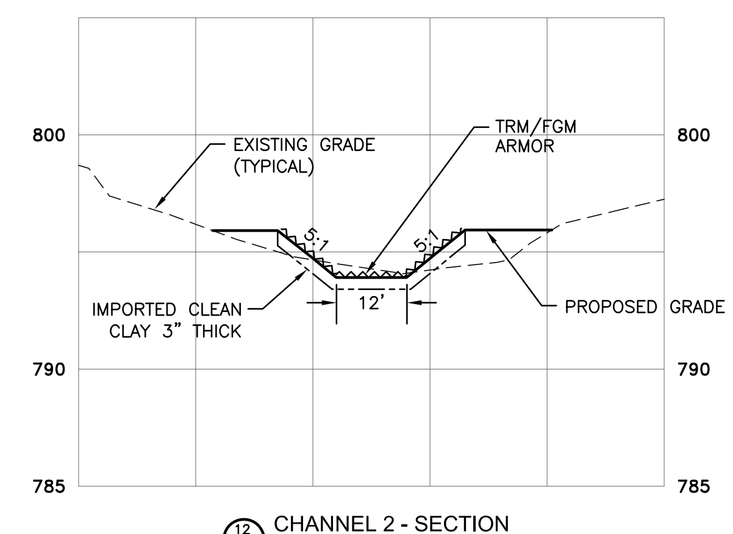

12 7|8 CHANNEL 2 - SECTION
HORIZONTAL 1"=20'
VERTICAL 1"=5'

REVISIONS

NO.	DATE	BY

SEAL

REGISTERED PROFESSIONAL ENGINEER THEODORE TELSAK 19532 OKLAHOMA

IMPERIAL REFINING SUPERFUND SITE
OPERATIONAL AND FUNCTIONAL ACTIVITIES
EPA REGION 6
ARDMORE, OKLAHOMA

CHANNEL CROSS SECTIONS

PREPARED FOR:

EPA

EA ENGINEERING, SCIENCE, AND TECHNOLOGY
405 S. HIGHWAY 121
BUILDING C, SUITE 100
LEWISVILLE, TEXAS 75067
(972) 315-3922
OKLAHOMA CERTIFICATION OF AUTHORIZATION NO. 3026

DATE	AUGUST 2011
DESIGNED BY	LLR
DRAWN BY	JRM
CHECKED BY	TT
PROJECT MANAGER	BY
PROJECT NUMBER	14342.39
SCALE	AS SHOWN
FILE NAME	SECTIONS.dwg
DRAWING NUMBER	C-6
SHEET NUMBER	8 OF 10

DRAWING NAME: F:\Federal\Hqs Bed\DMA\projects\14342\39\Figures\SECTIONS.dwg
DATE:08/30/2011 TIME:10:15:00 BY: Brian.Yarbrough

NOTES:
1. EXCAVATION IN POND SHALL BE LIMITED TO VEGETATION AND SEDIMENT WITHIN 1 FOOT OF CONCRETE WEIR INVERT.
2. ONSITE RIPRAP MATERIAL IS FROM AREA 12 AND IS APPROXIMATELY TYPE B.

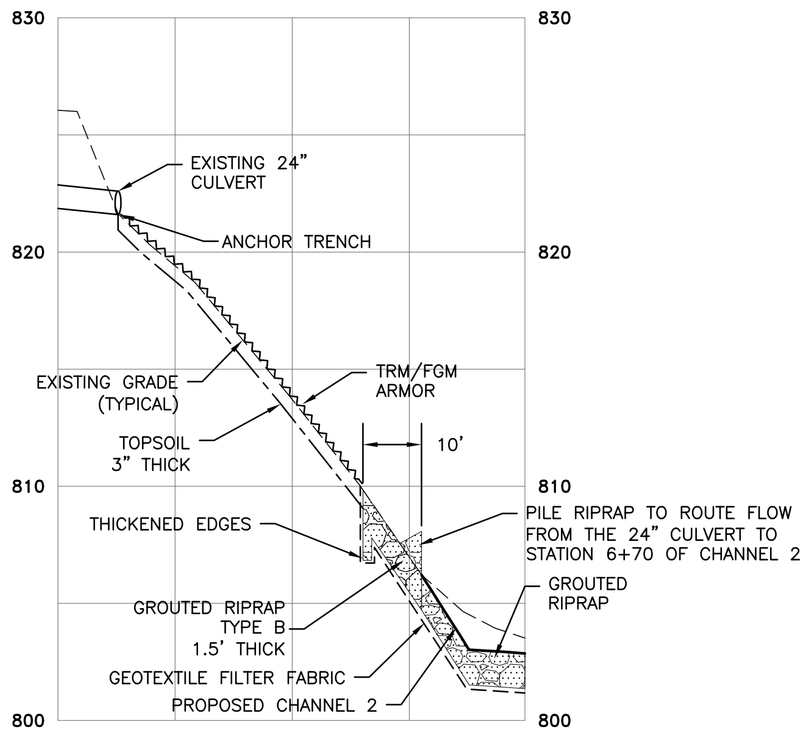

10/7|9 24" CULVERT SECTION
HORIZONTAL 1"=20'
VERTICAL 1"=5'

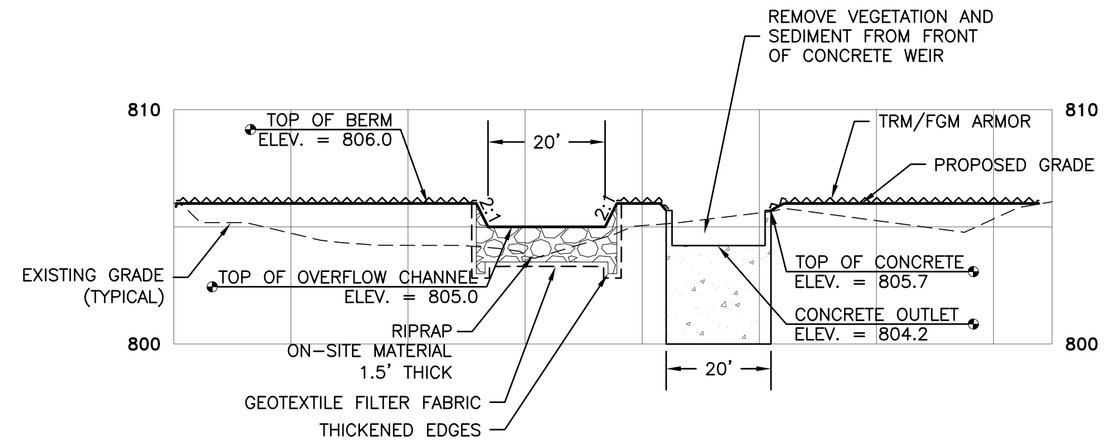

11/7|9 OVERFLOW CHANNEL - SECTION
HORIZONTAL 1"=20'
VERTICAL 1"=5'

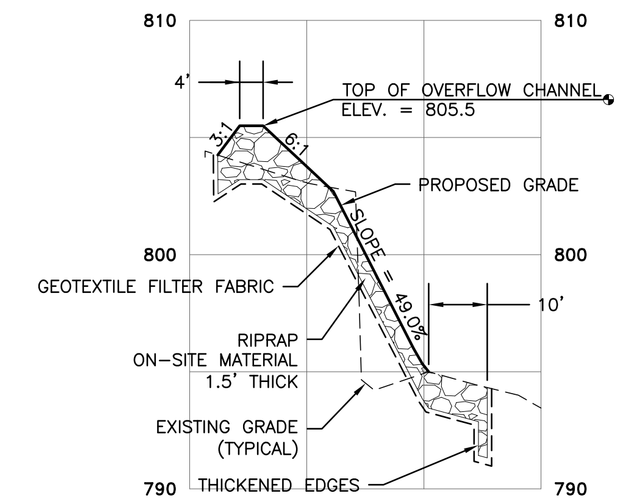

12/7|9 OVERFLOW CHANNEL - SECTION
HORIZONTAL 1"=20'
VERTICAL 1"=5'

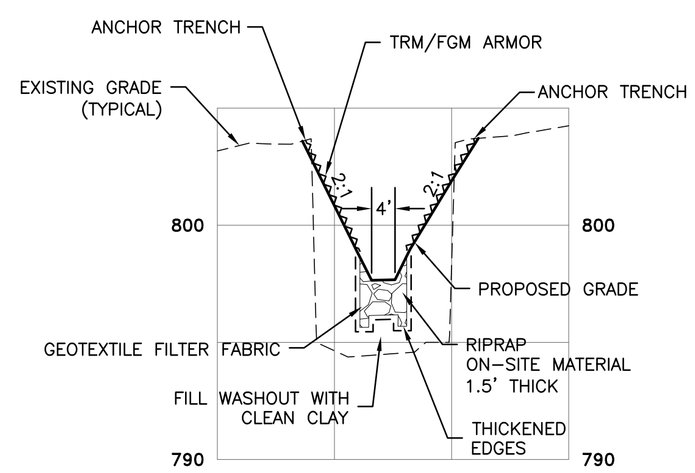

13/7|9 OVERFLOW CHANNEL - SECTION
HORIZONTAL 1"=20'
VERTICAL 1"=5'

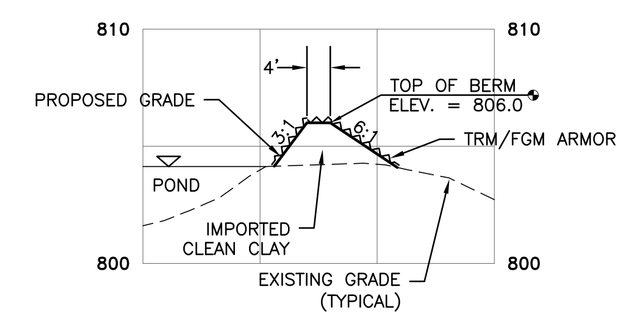

15/7|9 BERM - SECTION
HORIZONTAL 1"=20'
VERTICAL 1"=5'

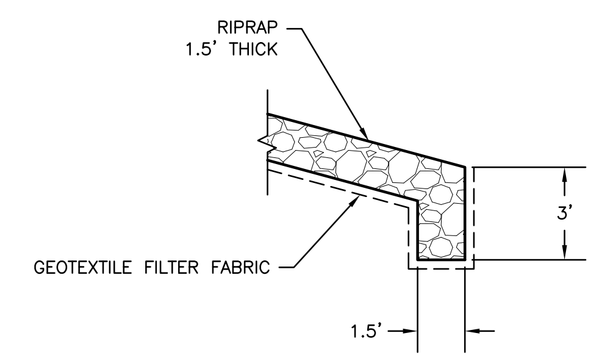

TYPICAL RIPRAP THICKENED EDGE DETAIL
NOT TO SCALE

LEGEND

GRAPHIC SYMBOL	DESCRIPTION
	EXISTING GRADE
	PROPOSED GRADE
	EXISTING FENCE
	TRM/FGM ARMOR
	COCONUT FIBER BLANKET
	GEOTEXTILE FILTER FABRIC
	RIPRAP
	PROPOSED GROUTED RIPRAP
SF SF SF	PROPOSED SILT FENCE
	PROPOSED TOPSOIL
	PROPOSED IMPORTED CLEAN CLAY

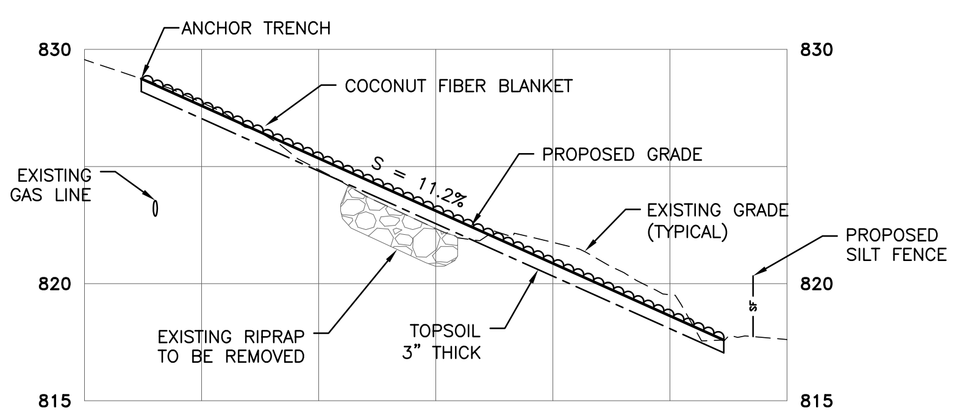

16/6|9 AREA 8 - TYPICAL SECTION
HORIZONTAL 1"=20'
VERTICAL 1"=5'

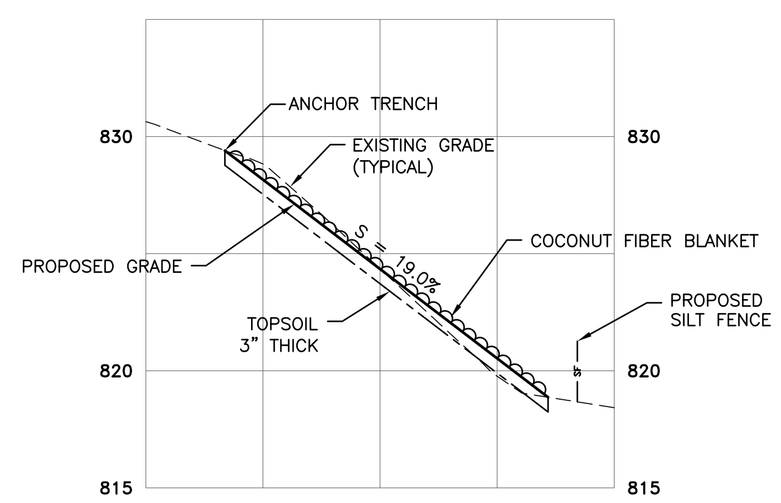

17/6|9 AREA 8 - TYPICAL SECTION
HORIZONTAL 1"=20'
VERTICAL 1"=5'

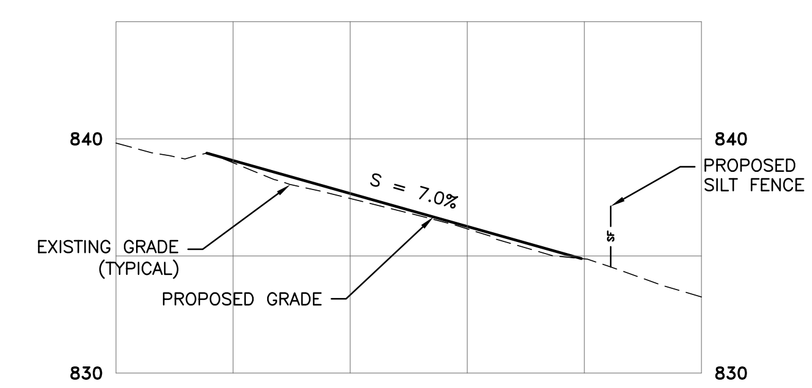

9/6|9 AREA 7 - TYPICAL SECTION
HORIZONTAL 1"=20'
VERTICAL 1"=5'

REVISIONS

NO.	DATE	BY

SEAL

IMPERIAL REFINING SUPERFUND SITE
OPERATIONAL AND FUNCTIONAL ACTIVITIES
EPA REGION 6
ARDMORE, OKLAHOMA

EROSION AREA CROSS SECTIONS

PREPARED FOR:
EPA

EA ENGINEERING, SCIENCE, AND TECHNOLOGY
405 S. HIGHWAY 121
BUILDING C, SUITE 100
LEWISVILLE, TEXAS 75067
(972) 315-3922
OKLAHOMA CERTIFICATION OF AUTHORIZATION NO. 3026

DATE	AUGUST 2011
DESIGNED BY	LLR
DRAWN BY	JRM
CHECKED BY	TT
PROJECT MANAGER	BY
PROJECT NUMBER	14342.39
SCALE	AS SHOWN
FILE NAME	SECTIONS.dwg
DRAWING NUMBER	C-7
SHEET NUMBER	9 OF 10

DRAWING NAME: F:\Projects\Imp Refi\DFA\project\14342.39\Figures\SECTIONS.dwg
DATE:08/30/2011 TIME:10:05 DRAWN BY: bsanders

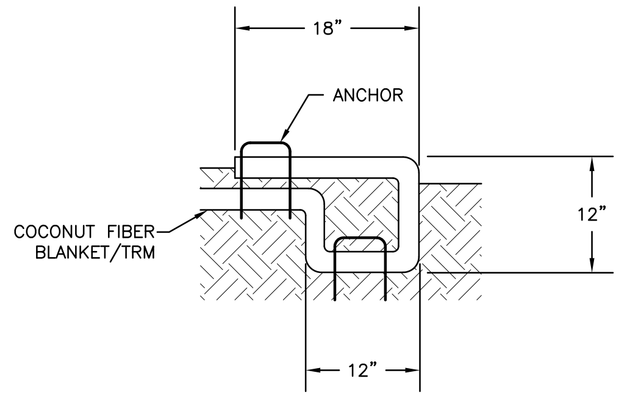

TYPICAL ANCHOR TRENCH/CHECK SLOT DETAIL
NO SCALE

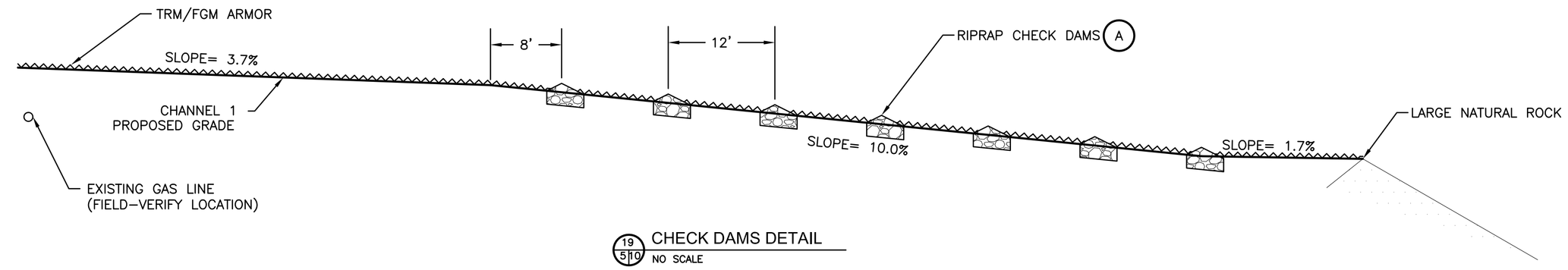

19 / 5 of 10 CHECK DAMS DETAIL
NO SCALE

NOTES:
1. CONTRACTOR SHALL SUPPORT EXISTING WATER LINE AND FIBER OPTIC LINE SO THERE IS NO MOVEMENT OF PIPE DURING EXCAVATION.
2. CONTRACTOR MUST CONTACT OKLAHOMA DEPARTMENT OF TRANSPORTATION, CITY OF ARDMORE, AND CHICKASAW TELECOM TO BE REPRESENTED DURING CONSTRUCTION.
3. NO MORE THAN 10' OF THE WATER LINE AND FIBER OPTIC LINE SHALL BE UNSUPPORTED BY EXISTING SOIL OR GRAVEL AT ONE TIME, AND BRACING SHALL BE PROVIDED AT CENTER OF EACH EXPOSED SECTION.

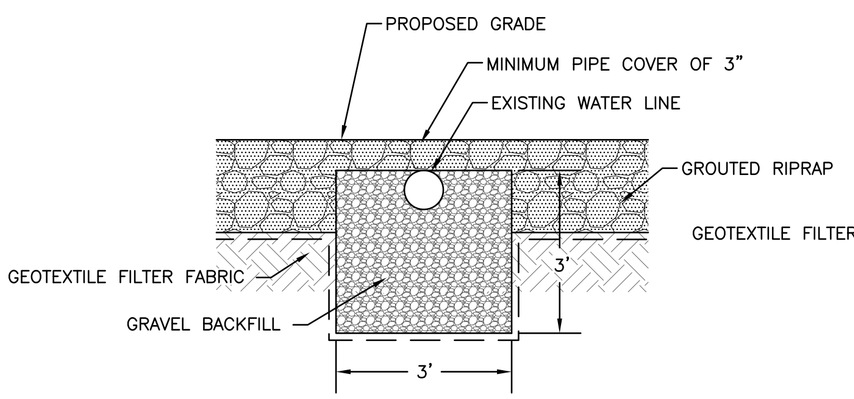

20 / 7 of 10 WATERLINE BACKFILL DETAIL
NO SCALE

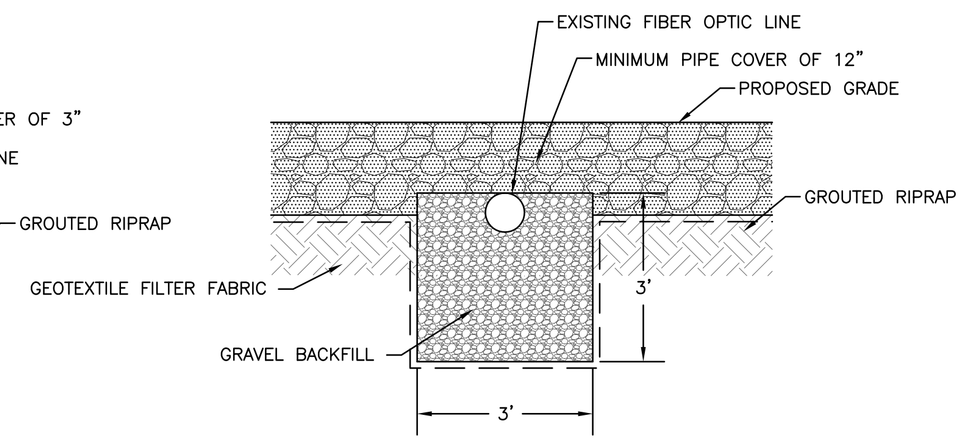

21 / 7 of 10 FIBER OPTIC LINE BACKFILL DETAIL
NO SCALE

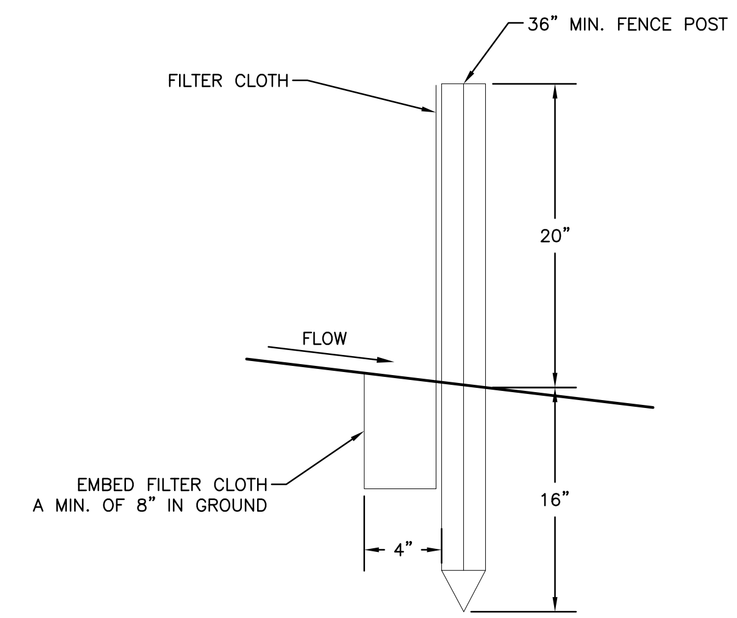

TYPICAL SILT FENCE SECTION
NO SCALE

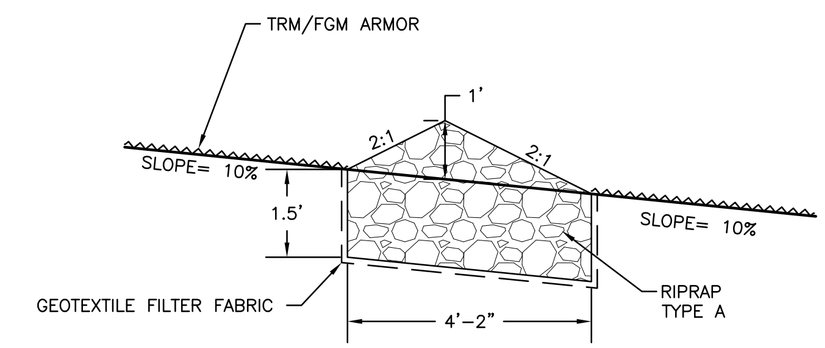

A CHECK DAM DETAIL
NO SCALE

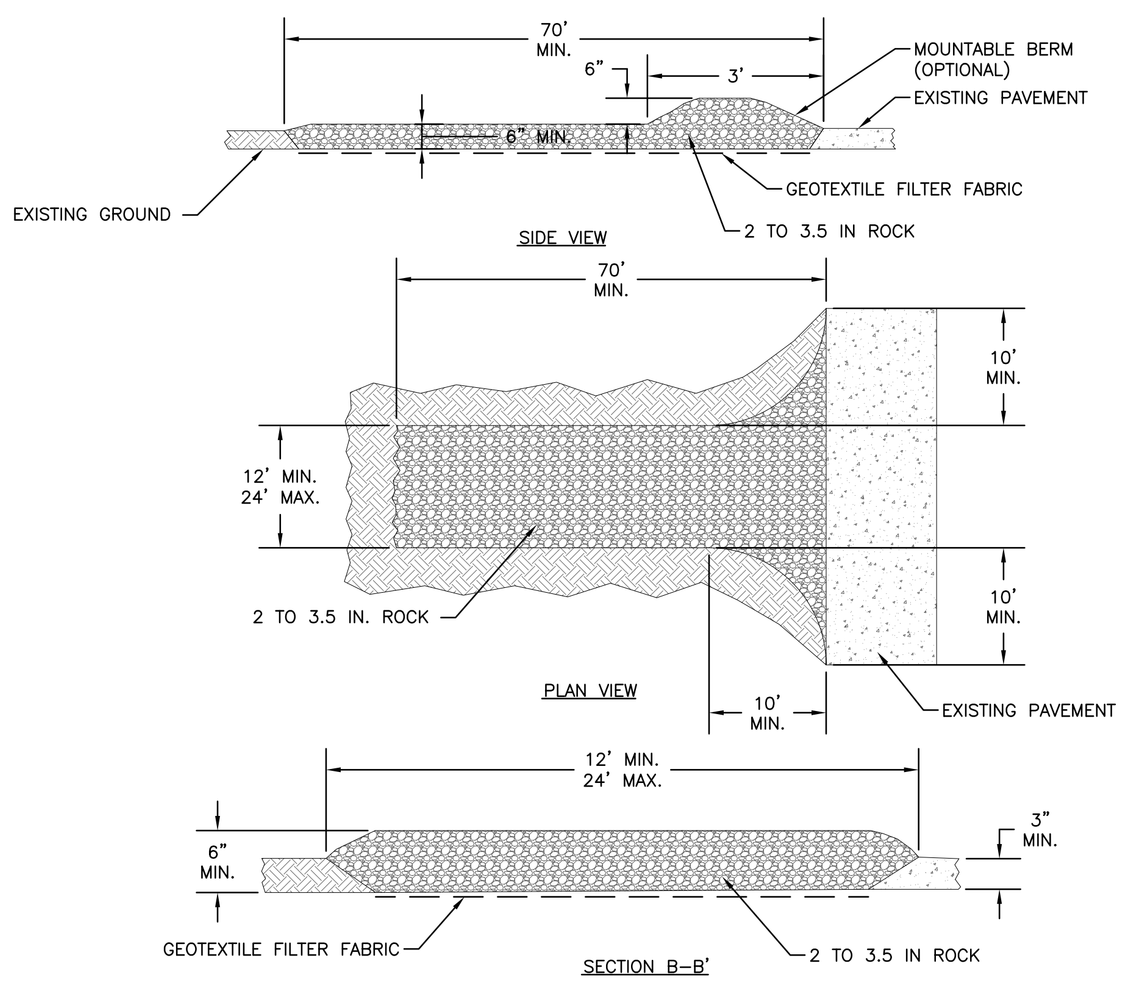

22 / 4 of 10 CONSTRUCTION ENTRANCE
NO SCALE

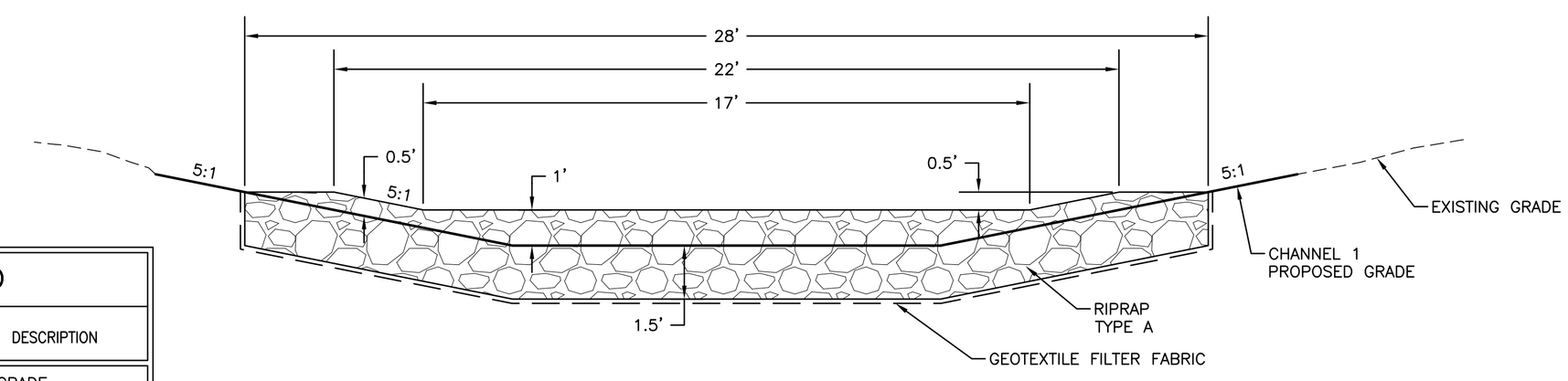

CHECK DAM CROSS SECTION
NO SCALE

LEGEND

GRAPHIC SYMBOL	DESCRIPTION
	EXISTING GRADE
	PROPOSED GRADE
	GEOTEXTILE FILTER FABRIC
	TRM/FGM ARMOR
	COCONUT FIBER BLANKET
	RIPRAP
	GROUTED RIPRAP
	GRAVEL
	EXISTING SOIL

REVISIONS

NO.	DATE	BY

SEAL

REGISTERED PROFESSIONAL ENGINEER THEODORE TELSAK 19532 OKLAHOMA

IMPERIAL REFINING SUPERFUND SITE
OPERATIONAL AND FUNCTIONAL ACTIVITIES
EPA REGION 6
ARDMORE, OKLAHOMA

DETAILS

PREPARED FOR:
EPA

EA ENGINEERING, SCIENCE, AND TECHNOLOGY
405 S. HIGHWAY 121
BUILDING G, SUITE 100
LEWISVILLE, TEXAS 75067
(972) 315-3922
OKLAHOMA CERTIFICATION OF AUTHORIZATION NO. 3026

DATE	AUGUST 2011
DESIGNED BY	LLR
DRAWN BY	JRM
CHECKED BY	TT
PROJECT MANAGER	BY
PROJECT NUMBER	14342.39
SCALE	AS SHOWN
FILE NAME	DETAILS.dwg
DRAWING NUMBER	C-8
SHEET NUMBER	10 OF 10

DRAWING NAME: F:\Projects\Doe(CEA)_projects\14342.39\Figures\DETAILS.dwg
DATE:08/30/2011 TIME:11:39 LAYOUT: 8-DETAILS

Appendix C

Specifications

Final Erosion Mitigation Design Technical Specifications
Imperial Refining Superfund Site
Operational and Functional Activities
Ardmore, Oklahoma

Remedial Action Contract 2 Full Service
Contract: EP-W-06-004
Task Order: 0039-RARA-06GX

Prepared for

U.S. Environmental Protection Agency
Region 6
1445 Ross Avenue
Dallas, Texas 75202-2733

Prepared by

EA Engineering, Science, and Technology, Inc.
405 S. Highway 121
Building C, Suite 100
Lewisville, Texas 75067
(972) 315-3922
Oklahoma Certificate of Authorization Number 3026

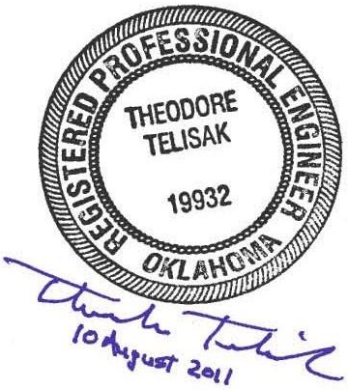

August 2011
Revision: 01
EA Project No. 14342.39

IMPERIAL REFINING SUPERFUND SITE
ARDMORE, CARTER COUNTY, OKLAHOMA
FINAL TECHNICAL SPECIFICATIONS

TABLE OF CONTENTS

DIVISION 1 – GENERAL REQUIREMENTS

01 10 00	SUMMARY
01 20 00	PRICE AND PAYMENT PROCEDURES
01 33 00	SUBMITTAL PROCEDURES
01 40 00	QUALITY REQUIREMENTS
01 50 00	TEMPORARY FACILITIES AND CONTROLS
01 70 00	EXECUTION AND CLOSEOUT REQUIREMENTS

DIVISION 31 – EARTHWORK

31 10 00	SITE CLEARING
31 23 16	EXCAVATION
31 23 23	FILL
31 34 19	GEOSYNTHETIC SOIL REINFORCEMENT
31 35 19	GEOSYNTHETIC SLOPE PROTECTION
31 37 00	RIPRAP

DIVISION 32 – EXTERIOR IMPROVEMENTS

32 92 19	SEEDING

DIVISION 1 – GENERAL REQUIREMENTS

01 10 00	SUMMARY
01 20 00	PRICE AND PAYMENT PROCEDURES
01 33 00	SUBMITTAL PROCEDURES
01 40 00	QUALITY REQUIREMENTS
01 50 00	TEMPORARY FACILITIES AND CONTROLS
01 70 00	EXECUTION AND CLOSEOUT REQUIREMENTS

SECTION 01 10 00

SUMMARY

PART 1 GENERAL

1.1 SECTION INCLUDES

A. Contract Description.

B. Definitions

C. Access And Access Control

D. Control Of Work

E. Legal Notification

F. Special Site Consideration

G. Reference Documents

H. Work Sequence

I. Communications

J. Site Security

K. Specification Conventions

1.2 CONTRACT DESCRIPTION

A. This Specification section provides a general description of the work. The Contractor shall refer to the appropriate detailed Specifications section for project specifics.

B. EA Engineering, Science, and Technology, Inc. (EA) is accepting bids for erosion mitigation of the Imperial Refining Superfund Site (hereinafter "the Site"). The Site is the location of a former petroleum refinery that operated from 1917 to 1934. The legal description for the property is Southeast ¼, Northeast ¼, Section 20, and Southwest ¼, Northwest ¼, Section 21, T4S, R2E, Indian Meridian, which is located within the northeastern portion of the City of Ardmore, Carter County, Oklahoma. The Site covers approximately 72 acres and is bisected by U.S. Highway 142 (Veterans Boulevard). Along one edge are railroad tracks operated by the Burlington Northern Santa Fe Railway Company. Numerous tanks and buildings were present on the Site during refinery operation. However, all of the tanks and most of the buildings were dismantled sometime between 1934 and 1948 leaving the property in much the same condition as it is today with mixed wooded areas and open fields. The site includes two ponds (West and East Pond), two channels (Channels 1 and 2), and one box culvert under Veterans Blvd. Primary access to the site is through two locked gates located on Veterans Boulevard. The National Superfund electronic database identification number is OK0002024099 for the Site.

C. Work of the Project includes, but is not limited to, erosion mitigation activities including; clearing and stockpiling woodchips, constructing an overflow channel, constructing 2 drainage channels, and repairing eroded areas.
   1. Woodchips: Clear woodchips from the Areas of Erosion Concern and stockpile in areas shown in Drawings.
   2. Overflow Channel: Construct a berm and an overflow channel adjacent to the existing concrete outlet. Clear sediment and vegetation from the weir of the existing concrete outlet. Fill the existing washout with clean clay and grade to conform to the overflow channel. Install TRM/FGM Armor on the slopes of the clay fill.
   3. Channels: Construct Channels 1 and 2 with imported clean clay and armor with TRM/FGM Armor. Construct check dams in Channel 1. Armor Channel 2 with grouted riprap for 100 feet downstream of the Veterans Blvd. culvert. Cover the existing water and fiber optic lines with grouted riprap. Straighten the alignment of Channel 2. Fill the existing channel. Regrade the downstream half of the existing channel into a shallow swale.
   4. Erosion Areas: Repair each area as described.
      a. Poor Soil area (Area 12): Grade smooth to remove rill erosion, cover with 3 inches of topsoil which will be tilled into the existing soil, prepare seed bed, apply fertilizer and compost, drill seed, and cover with mechanically anchored straw mulch.
      b. High Erosion areas (Areas 2, 3, 8, and 11): Grade smooth to remove rill erosion, cover with 3 inches of topsoil which will be tilled into the existing soil, prepare seed bed, apply fertilizer, drill seed, and armor with coconut fiber blanket or TRM/FGM Armor as noted in the Drawings.
      c. Moderate Erosion areas (Areas 1 and 7): Grade smooth to remove rill erosion, prepare seed bed, apply fertilizer, drill seed, and cover with mechanically anchored straw mulch.
      d. Low Erosion areas (Areas 4, 5, 6, 9, and 10): Prepare seed bed, apply fertilizer, drill seed, and cover with mechanically anchored straw mulch.

D. All work items are to be conducted according to the design specifications included with these Contract Drawings and Bid Documents.

1.3 DEFINITIONS

A. Definitions of contractual or associated parties, referenced herein on the drawings and in the specifications, are listed below:
   1. Government—The U.S. Environmental Protection Agency (EPA) or Oklahoma Department of Environmental Quality (ODEQ).
   2. Engineer—EA Engineering, Science, and Technology, Inc.
   3. Contractor—A person, company or organization who has contracted with Engineer and is directly responsible for performance of the Work referenced in the specifications, drawings or as included herein.
   4. Subcontractor—A person, company or organization who has contracted with the Contractor for the purpose of supplying services, materials, assemblies or other items as required to perform the Work referenced in the specifications, drawings or as included herein.
   5. Others—A person, company or organization who has contracted with Engineer for the purpose of supplying services, materials, or other items of work independent of those services, materials, or other items of work supplied by the Contractor.

1.4 ACCESS AND ACCESS CONTROL

A. Engineer will provide access to the property through the access gates. Contractor shall smooth primary access route as needed to allow 2-wheel-drive cars to be driven onto the gravel staging area.

B. Lock the gate at night or weekends or when work is not happening.

1.5 CONTROL OF WORK

A. Survey controls are available onsite as indicated on the Drawings. Contractor shall verify with the Engineer locations of site reference and survey control points prior to starting work. All control points shall be carefully preserved, and if destroyed or removed without Engineer approval, shall be reset by the Contractor's independent surveyor at the expense of the Contractor. Contractor shall notify Engineer of discrepancies.

B. Control datum for survey is that shown on Drawings.

C. Using the provided control points, the Contractor shall set necessary construction layout stakes as shown on the Drawings. Establish elevations, lines, and levels, utilizing recognized engineering survey practices.

D. Confirm drawing dimensions and elevations.

E. Engineer will provide electronic AutoCAD files upon request.

F. Maintain complete and accurate log of control and survey work as Work progresses.

1.6 LEGAL NOTIFICATION

A. The Contractor shall give all notices and comply with all laws, ordinances, codes, permits, rules, and regulations bearing on the conduct of the work as drawn and specified. If the Contractor performs any work contrary to such laws, ordinances, codes, permits, rules, and regulations, he shall bear all costs arising therefrom. It is the responsibility of the Contractor to identify and secure any and all permits to be maintained during the course of the project as required to execute this Contract.

1.7 SPECIAL SITE CONSIDERATION

A. The Contractor is responsible for control of odor, emissions, and dust and shall provide all equipment necessary to accomplish these tasks. The Contractor is responsible for obtaining any required water and the cost shall be considered incidental to the lump sum of the Contract. Ground water from Site wells shall not be used.

B. The Contractor shall control storm water in accordance with Section 01 50 00 – Temporary Facilities and Controls.

C. Contractor shall use ultra low sulfur #2 diesel fuel in all diesel construction equipment used during the project.

D. The Contractor is responsible for providing a supervisor with 40 Hours Occupational Safety and Health Administration (OSHA) Hazardous Waste Operations (HAZWOPER) training to oversee all work in areas where excavated material contains contaminates of concern.

1.8 REFERENCE DOCUMENTS

A. In addition to the Drawings and Specifications, the following documents are referenced for the Contractor's information prior to bidding. These documents contain information on the nature and extent of contamination at the site before remediation, some of which remains:
   1. Superfund Record of Decision Amendment Summary, Imperial Refining Company Superfund Site, Ardmore, Oklahoma. EPA. February 2009.
   2. Subsurface Exploration and Analysis, Imperial Refining Site at SH-142/Veterans Boulevard, Ardmore, Oklahoma. Integrated Testing and Engineering Company of DFW Metro, Inc. 21 October 2010.
   3. Draft Erosion Mitigation Evaluation Report, Imperial Refining Superfund Site, Ardmore, Oklahoma. EA. December 2010.
   4. Draft Erosion Mitigation Design Report, Imperial Refining Superfund Site, Ardmore, Oklahoma. EA. April 2010.

1.9 WORK SEQUENCE

A. The following is a general sequence of construction developed for execution of construction, to aid bidders in understanding the contract requirements. However, the Contractor is responsible for developing and sequencing of work as required to comply with all the requirements of the Contract Documents. An alternate sequence may be approved by the Engineer.
   1. Preparation and approval of required plans and submittals.
   2. Site Construction Layout.
   3. Locate utilities.
   4. Temporary Sediment and Erosion Control.
   5. Clear and relocate existing woodchips, straw wattles, silt fence, and rocks.
   6. Construct Channels 1 and 2 and overflow channel.
   7. Construct grouted riprap channel and check dams.
   8. Re-grade moderate erosion, high erosion, and poor soil areas.
   9. Cover high erosion and poor soil areas with topsoil.
   10. Seed all erosion areas and mulch low erosion areas.
   11. Line Channels 1 and 2 with TRM/FGM armor.
   12. Line high erosion areas with coconut fiber blanket.

1.10 COMMUNICATIONS

A. All communications pursuant to or in connection with this contract shall be identified by the Engineer subcontract number and shall be communicated as set forth below:
   1. Contractual Notices
      a. All contractual notices given under this contract shall be sufficient if in writing and delivered in person to an officer of the part to be notified, or sent to the party to be notified, addressed as set forth below, by registered mail, telex, facsimile, cable, or e-mail. Telexes, facsimiles, and cables must be confirmed in writing within three days thereafter.
      b. Contractual notices to Engineer shall be addressed to EA's home office address set forth herein and marked Attention: Mr. Brian McLaughlin.

EA's Home Office Address:
Mr. Brian McLaughlin
EA Engineering, Science, and Technology, Inc.
11019 McCormick Road
Hunt Valley, MD 21031
Phone: 410-584-7000
Fax: 410-771-1625
E-mail: bmclaughlin@eaest.com

c. Contractual notices to Contractor shall be addressed to Contractor's address which is to be determined after the selection of a Contractor.

1.11 SITE SECURITY

A. Security will not be provided by Engineer or the Government. The Contractor shall, at all times, take reasonable precautions in conducting all operations under this contract in a manner to avoid the risk of loss, theft or damage to the equipment and supplies. Engineer or the Government will not be responsible for the loss, theft, or damage of the Contractor's equipment.

1.12 SPECIFICATION CONVENTIONS

A. Some of these specifications are written in imperative mood and streamlined form. This imperative language is directed to the Contractor, unless specifically noted otherwise. The words "shall be" are included by inference where a colon (:) is used within sentences or phrases.

PART 2 PRODUCTS - Not Used

PART 3 EXECUTION

3.1 QUALITY CONTROL

A. During performance of the Work, the Contractor shall document and control quality of the Work in accordance with the referenced specifications and Sections 01 33 00 – Submittal Procedures, 01 40 00 – Quality Requirements, and 01 70 00 – Execution and Closeout Requirements.

B. Quality control includes, but is not limited to, geotechnical testing, analytical testing, and surveying.

3.2 PRE-CONSTRUCTION MEETING

A. Contractor shall attend a pre-construction meeting conducted by Engineer before performance of any Work. The preconstruction meeting shall be held no sooner than three days after award of the contract and no less than one week before mobilization to the site.

B. Attendance
   1. Government Representatives.
   2. Engineer representatives.
   3. Contractor's construction supervisor, and project manager.
   4. Major Subcontractor representatives (if any).

C. Meeting Agenda
   1. The meeting agenda will include the following:
      a. Introduction of Contractor.
      b. Designation of personnel representing parties in Contract.
      c. Discussion of construction schedule.
      d. Distribution of contract documents.
      e. Submission of list of Subcontractors, list of products, schedule of values, and progress schedule.
      f. Clarification of specification questions.
      g. Procedures and processing of field decisions, submittals, substitutions, applications for payments, proposal request, Change Orders, and Contract closeout procedures.
      h. Procedures for maintaining record documents.
      i. Use of project premises.
      j. Submission and processing of monthly application for payment forms and associated requirements.
      k. Requirements for emergency response and health and safety.

3.3 WORK HOURS

A. Work shall be performed during periods in which adequate light levels are available to provide a safe working environment. Night work shall not be allowed for performance of the Work without written prior approval from Engineer.

END OF SECTION

SECTION 01 20 00

PRICE AND PAYMENT PROCEDURES

PART 1 GENERAL

1.1 SECTION INCLUDES

A. Description

B. Submittals

C. Measurement

D. Payment

E. Change Procedures

F. Measurement and Payment

1.2 DESCRIPTION

A. The items listed in this section refer to and are the same pay items listed on the Bid Form. They constitute all of the pay items for the completion of the Work. Compensation for all such services and materials shall be included in the prices stipulated for the lump sum and unit price pay items listed herein. Items of Work not specifically included in this Section for measurement and payment as described herein will not be measured for payment, but will be considered incidental to the Contract.

1.3 SUBMITTALS

A. The Contractor shall submit to the Engineer a completed Bid Form including unit prices for each bid item. This Bid Form shall be used as the basis for the Contractor's Applications for Periodic Payments.

1.4 MEASUREMENT

A. Measurement shall be in accordance with the Bid Form items as described in this Section. The quantities listed in the Bid Form shall not be exceeded unless pre-approved by the engineer and supported with detailed documentation.
   1. Lump Sum Price Items
      a. Measurement of lump sum priced items will be based on percent complete for the item.
   2. Unit Price Items
      a. Measurement of unit price items will be based on percent complete of quantities listed in the Bid Form.

1.5 PAYMENT

A. Payment for Unit Price items will be made at the Contract Unit Price given in the Bid Form.

B. Payment for Lump Sum items will be made at the Contract Lump Sum Price given in the Bid Form.

C. Progress payments to the Contractor will be made for the actual percentage of Work completed.

D. No payment shall be made for work performed by the Contractor to replace defective work, work which is not required by the Contract Documents, work outside the limits of the contract and additional work necessary due to actions of the Contractor, unless ordered by the Engineer in writing.

1.6 CHANGE PROCEDURES

A. Submittals: Submit name of individual authorized to receive change documents, and be responsible for informing others in Contractor's employ or Subcontractors of changes to the Work.

B. The Engineer will advise of minor changes in the Work not involving adjustment to Contract Sum/Price or Contract Time by issuing supplemental instructions.

C. The Engineer may issue a proposal for additional work to the Contractor, including a detailed description of proposed change with supplementary or revised quantities, Drawings, and specifications, and a change in Contract Time for executing the change. Contractor will prepare and submit estimate within 15 days.

D. Contractor may propose changes by submitting a request for change to Engineer, describing proposed change and its full effect on the Work. Include a statement describing reason for the change, and effect on Contract Sum/Price and Contract Time with full documentation.

1.7 MEASUREMENT AND PAYMENT

A. Bid Item 1: Mobilization and Demobilization
   1. Basis of Measurement: On a lump sum basis.
   2. Basis of Payment: Includes of all materials, labor, and equipment to complete Work activities for mobilization and demobilization. The Work shall include, but not be limited to, obtaining of all permits; moving onto the site of all equipment; plan and shop drawing preparation; submittals, administration, temporary buildings (if any), operating supplies, detailed construction layouts (construction staking), final as-built surveying, and coordination necessary for the Contractor to provide and maintain a construction force at the project site complete and ready to perform all work required under the Contract

B. Bid Item 2: Erosion and Sediment Control
   1. Basis of Measurement: On a lump sum basis.
   2. Basis of Payment: Includes all preparation, excavation, dewatering, backfill, sediment control fabric and other materials, and incidental items necessary to construct and maintain sediment control barriers, construction entrances or other best management

practices (BMPs) identified in the storm water pollution prevention plan, to monitor the maintenance of these erosion and sediment control measures, and to remove and dispose of them after vegetation is established. Work related to the diversion of storm water flows around the work site shall be included under this item.

C. Bid Item 3: Site Clearing
   1. Basis of Measurement: On a lump sum basis.
   2. Basis of Payment: Includes clearing and relocating woodchips, existing silt fence, existing storm wattles, existing riprap, and natural rocks as detailed in the Drawings and Technical Specifications.

D. Bid Item 4: Excavation
   1. Basis of Measurement: By cubic yard.
   2. Basis of Payment: Includes excavating to required elevations and loading and placing materials in a spoil area, and providing and filling 55 gallon drums with contaminated material if found in excavations as detailed in the Drawings and Technical Specifications.

E. Bid Item 5: Site Grading
   1. Basis of Measurement: By square yard.
   2. Basis of Payment: Includes tilling and grading to remove rill erosion as detailed in the Drawings and Technical Specifications.

F. Bid Item 6: Clay Fill
   1. Basis of Measurement: By cubic yard.
   2. Basis of Payment: Includes loading, and hauling Engineer approved fill materials obtained from contractor-supplied offsite borrow areas, sample collection and geotechnical testing, scarifying substrate surface, placing where required, compacting and density testing as detailed in the Drawings and Technical Specifications.

G. Bid Item 7: Topsoil
   1. Basis of Measurement: By cubic yard.
   2. Basis of Payment: Includes loading, hauling, and placing Engineer approved topsoil obtained from contractor-supplied offsite borrow areas, sample collection and geotechnical testing, scarifying substrate surface, placing where required as detailed in the Drawings and Technical Specifications.

H. Bid Item 8: Riprap
   1. Basis of Measurement: By ton.
   2. Basis of Payment: Includes loading and hauling rock riprap from a quarry, placing rock riprap on a prepared subgrade at the locations and to the lines, grades, thickness, and with QA/QCs indicated on the Drawings and Technical Specifications.

I. Bid Item 9: On-Site Riprap
   1. Basis of Measurement: By ton.
   2. Basis of Payment: Includes loading and hauling rock riprap from a On-Site, and placing rock riprap on a prepared subgrade at the locations and to the lines, grades, thickness, and with QA/QCs indicated on the Drawings and Technical Specifications.

J. Bid Item 10: Grouted Riprap and Utility Protection
   1. Basis of Measurement: On a lump sum basis.

2. Basis of Payment: Includes excavation and gravel backfill around utilities, and loading, hauling and placing grouted rock riprap on a prepared subgrade at the locations and to the lines, grades, thickness, and with QA/QCs indicated on the Drawings and Technical Specifications.

K. Bid Item 11: Geotextile Filter Fabric
   1. Basis of Measurement: By square yard.
   2. Basis of Payment: Includes providing and installing geotextile filter fabric under riprap, including the preparation of the subgrade for the placement of the fabric and QA/QCs as necessary to complete the installation as detailed in the Drawings and Technical Specifications.

L. Bid Item 12: Coconut Fiber Blanket
   1. Basis of Measurement: By square yard.
   2. Basis of Payment: Includes installing coconut fiber blanket on finished grades as detailed in the Drawings and Technical Specifications. This item includes all materials, labor, blanket anchoring materials, QA/QCs, and other items necessary to complete the work as indicated on the Drawings.

M. Bid Item 13: TRM/FGM Armor
   1. Basis of Measurement: By square yard.
   2. Basis of Payment: Includes installing Turf Reinforcement Mat/Flexible Growth Medium Armor on finished grades as detailed in the Drawings and Technical Specifications. This item includes all materials, labor, blanket anchoring materials, QA/QCs, and other items necessary to complete the work as indicated on the Drawings.

N. Bid Item 14: Seeding
   1. Basis of Measurement: By acre.
   2. Basis of Payment: Includes seed bed preparation, seed, mulch, and other materials and incidental items necessary to seed coconut fiber blanket and TRM/FGM armor, and seed and mulch disturbed areas as defined on the Drawings and Technical Specifications.

O. Bid Item 15: Bonds
   1. Basis of Measurement: On a lump sum basis.
   2. Basis of Payment: Includes all materials, labor, and equipment necessary to obtain bonding and surety in accordance with the Contract Documents.

P. Bid Item 16: Insurance
   1. Basis of Measurement: On a lump sum basis.
   2. Basis of Payment: Includes all materials, labor, and equipment necessary to obtain insurance in accordance with the Contract Documents.

PART 2 PRODUCTS - Not Used

PART 3 EXECUTION - Not Used

END OF SECTION

SECTION 01 33 00

SUBMITTAL PROCEDURES

PART 1 GENERAL

1.1 SECTION INCLUDES

A. Submittal procedures.

B. Construction progress schedules.

C. Product data.

D. Test reports.

E. Certificates.

F. Approval Process

1.2 SUBMITTAL PROCEDURES

A. Transmit each submittal with an Engineer accepted form.

B. Sequentially number transmittal forms. Mark revised submittals with original number and sequential alphabetic suffix.

C. Identify Project, Contractor, subcontractor and supplier; pertinent drawing and detail number, and specification section number, appropriate to submittal.

D. Apply Contractor's stamp, signed or initialed certifying that review, approval, verification of products required, field dimensions, adjacent construction Work, and coordination of information is in accordance with requirements of the Work and Contract Documents.

E. Schedule submittals to expedite Project, and deliver to Engineer at 405 S. Highway 121 Building C. Suite 100, Lewisville, Texas 75067. Coordinate submission of related items.

F. For each submittal for review, allow 15 days excluding delivery time to and from Contractor.

G. Identify variations from Contract Documents and product or system limitations which may be detrimental to successful performance of completed Work.

H. When revised for resubmission, identify changes made since previous submission.

I. Distribute copies of reviewed submittals as appropriate. Instruct parties to promptly report inability to comply with requirements.

1.3 CONSTRUCTION PROGRESS SCHEDULES

A. Submit initial schedules within 10 days after Notice to Proceed. After review, resubmit required revised data within ten days.

B. Distribute copies of reviewed schedules to Project site file, subcontractors, suppliers, and other concerned parties.

C. Instruct recipients to promptly report, in writing, problems anticipated by projections indicated in schedules.

1.4 PRODUCT DATA

A. Product Data: Submit to Engineer for review for limited purpose of checking for conformance with information given and design concept expressed in Contract Documents.

B. Submit number of copies Contractor requires, plus two copies Engineer will retain. Alternatively, Contractor may provide submittals in pdf format via email.

C. Mark each copy to identify applicable products, models, options, and other data. Supplement manufacturers' standard data to provide information specific to this Project.

D. After review, produce copies and distribute in accordance with Submittal Procedures and for record documents described in Section 01 70 00 - Execution and Closeout Requirements.

1.5 TEST REPORTS

A. Submit for Engineer's knowledge.

B. Submit test reports for information for limited purpose of assessing conformance with information given and design concept expressed in Contract Documents.

1.6 CERTIFICATES

A. When specified in individual specification sections, submit certification by manufacturer, installation/application subcontractor, or Contractor to Engineer, in quantities specified for Product Data.

B. Indicate material or product conforms to or exceeds specified requirements. Submit supporting reference data, affidavits, and certifications as appropriate.

C. Certificates may be recent or previous test results on material or Product, but must be acceptable to Engineer.

1.7 APPROVAL PROCESS

A. Allow 15 calendar days for checking and appropriate action by the Engineer. Contractor’s drawings will be returned stamped with one of the following classifications:
   1. CODE A (APPROVED) – No corrections, no marks.
   2. CODE B (APPROVED AS NOTED) – A few minor corrections or notes to Contractor. Contractor shall complete work in accordance with corrections or notes. All items may be fabricated as marked without further resubmission.
   3. CODE C (REVISE AND RESUBMIT) – Minor corrections. Items not noted to be revised and corrected may be fabricated. Resubmit drawings as per original submissions with corrections noted. Allow 15 calendar days for rechecking and appropriate action by the Engineer.

4. CODE X (NOT APPROVED) – Requires corrections or is otherwise not in accordance with the Contract Documents. No items shall be fabricated.

PART 2 PRODUCTS - Not Used

PART 3 EXECUTION - Not Used

END OF SECTION

SECTION 01 40 00

QUALITY REQUIREMENTS

PART 1 GENERAL

1.1 SECTION INCLUDES

A. Quality control and control of installation

B. References

C. Labeling

D. Examination

1.2 QUALITY CONTROL AND CONTROL OF INSTALLATION

A. Comply with analytical testing and QA/QC requirements provided in Division 31, including, but not limited to, geotechnical analysis, riprap material testing, and fertilizer analysis.

B. Maintain quality control over suppliers, manufacturers, products, services, site conditions, and workmanship, to produce Work of specified quality.

C. Comply with manufacturers' instructions, including each step in sequence.

D. When manufacturer's instructions conflict with Contract Documents, request clarification from Engineer before proceeding.

E. Comply with specified standards as minimum quality for the Work except where more stringent tolerances, codes, or specified requirements indicate higher standards or more precise workmanship.

F. Work shall be performed by persons qualified to produce required and specified quality.

G. Verify field measurements are as indicated on Shop Drawings or as instructed by manufacturer.

H. Secure products in place with positive anchorage devices designed and sized to withstand stresses, vibration, physical distortion, or disfigurement.

1.3 REFERENCES

A. For products or workmanship specified by association, trade, or other consensus standards, comply with requirements of standard except when more rigid requirements are specified or are required by applicable codes.

B. Conform to reference standard by date of issue current on date of Contract Documents, except where specific date is established by code.

C. Obtain copies of standards where required by product specification sections.

D. When specified reference standards conflict with Contract Documents, request clarification from the Engineer before proceeding.

E. Neither contractual relationships, duties, nor responsibilities of parties in Contract shall be altered from Contract Documents by mention or inference otherwise in reference documents.

1.4 LABELING

A. Label Information: Include manufacturer's or fabricator's identification, approved agency identification, and the following information, as applicable, on each label:
   1. Model number
   2. Serial number
   3. Performance characteristics

PART 2 PRODUCTS - Not Used.

PART 3 EXECUTION

3.1 EXAMINATION

A. Verify existing site conditions are acceptable for subsequent Work. Beginning new work means acceptance of existing conditions.

B. Examine and verify specific conditions described in individual specification sections.

END OF SECTION

SECTION 01 50 00

TEMPORARY FACILITIES AND CONTROLS

PART 1 GENERAL

1.1 SECTION INCLUDES

A. Temporary Utilities:
   1. Temporary sanitary facilities.

B. Construction Facilities:
   1. Vehicular access.
   2. Parking.
   3. Progress cleaning and waste removal.
   4. Staging Areas.

C. Temporary Controls:
   1. Dust control.
   2. Erosion and sediment control.

1.2 TEMPORARY SANITARY FACILITIES

A. Provide and maintain toilet facilities and enclosures. Provide facilities from the time of project mobilization, until demobilization.

1.3 VEHICULAR ACCESS

A. Construct temporary access roads from public thoroughfares to serve construction area, of width and load bearing capacity to accommodate unimpeded traffic for construction purposes.

B. Construct temporary bridges and culverts to span low areas and allow unimpeded drainage.

C. Provide unimpeded access for emergency vehicles. Maintain 20 feet wide driveways with turning space between and around combustible materials.

D. Provide means of removing mud from vehicle wheels before entering streets.

1.4 PARKING

A. Construction workers shall park personal vehicles in the staging area or at offsite locations.

B. Maintenance: Maintain traffic and parking areas in sound condition free of excavated material, construction equipment, products, mud, snow, and ice.

C. Repair: Repair existing facilities damaged by use, to original condition.

1.5 PROGRESS CLEANING AND WASTE REMOVAL

A. Maintain areas free of waste materials, debris, and rubbish. Maintain site in clean and orderly condition.

B. Collect and remove waste materials, debris, and rubbish from site periodically and dispose off-site. Soil containing contaminates of concern shall be drummed and stored in the staging area for later disposal by others.

1.6 STAGING AREAS

A. Utilize staging areas as shown on the Drawings. Allow for access, orderly provision for maintenance, and for inspection of products.

1.7 DUST CONTROL

A. Execute Work by methods to minimize raising dust from construction operations.

B. Provide positive means to prevent air-borne dust from dispersing into atmosphere.

1.8 EROSION AND SEDIMENT CONTROL

A. Plan and execute construction by methods to control surface drainage from cuts and fills, from borrow and waste disposal areas. Prevent erosion and sedimentation.

B. Create and implement storm water pollution prevention plan (SWPPP) and follow all stormwater best management practices.

C. The stabilization practices to be implemented shall include temporary silt fences or engineer approved equivalent.

D. Minimize surface area of bare soil exposed at one time.

E. Periodically inspect earthwork to detect evidence of erosion and sedimentation; promptly apply corrective measures.

PART 2 PRODUCTS

2.1 SILT FENCES

A. Filter Fabric

Provide woven fabric that meets the following requirements:

FILTER FABRIC FOR SILT SCREEN FENCE

PHYSICAL PROPERTY	TEST PROCEDURE	STRENGTH REQUIREMENT
Grab Tensile	ASTM D 4632	100 lbs. min.
Elongation (percent)		30 percent max.
Trapezoid Tear	ASTM D 4533	55 lbs. min.
Permittivity	ASTM D 4491	0.2 sec-1
AOS (U.S. Std Sieve)	ASTM D 4751	20-100

PART 3 EXECUTION

3.1 INSTALLATION

A. Silt Fences:
   1. Provide silt fences where shown on the Drawings or SWPPP as a temporary structural practice to minimize erosion and sediment runoff.
   2. Install silt fences to retain sediment prior to initiating each phase of work where erosion would occur in the form of sheet and rill erosion (e.g. clearing and grubbing, excavation, embankment, and grading).
   3. Place silt fence parallel with grading contour.
   4. The ends of the fence shall be extended up slope to prevent water from flowing around ends of the fence.

3.2 REMOVAL OF MATERIALS

A. Following completion of the project, all materials shall be removed from the Site. The removal of any erosion and sediment control measure shall only be performed upon receiving permission from the Engineer. All upstream contributing drainage areas to the individual controls shall be vegetatively stabilized and healthy and vigorous turf shall be present as described in 32 92 19 – Seeding and 31 35 19 – Geosynthetic Slope Protection prior to removal.

3.3 MAINTENANCE

A. Maintain the erosion and sediment control measures in good and effective operating condition by performing routine inspections to determine condition and effectiveness, and repair of erosion and sediment control measures. Use the following procedures to maintain the protective measures.
   1. Silt Fence Maintenance
      a. Inspect the silt fences in accordance with the paragraph titled "Inspections," of this section. Any required repairs shall be made promptly. Pay close attention to the repair of damaged silt fence resulting from end runs and undercutting. Should the fabric on a silt fence decompose or become ineffective when the barrier is still necessary, replace the fabric promptly. Remove sediment deposits when deposits reach one-third of the height of the barrier.
   2. TRM/FGM Armor Maintenance
      a. Inspect the TRM/FGM armor in accordance with the paragraph titled "Inspections," of this section. Any required repairs shall be made promptly. Should the TRM/FGM armor be torn or punctured or otherwise damaged, or the overlaps disturbed or displaced, Contractor shall repair damage and correct disturbances. Repairs shall consist of a patch placed over the damaged area. Patches shall be of the same type of TRM/FGM armor as that being patched. Patches shall extend a minimum of 18 inches beyond the damaged area, in all directions.
      b. If damage to the TRM/FGM armor results in damage to the subgrade, as evidenced by subgrade pumping, intrusion, or grade distortion, the subgrade around the damage or displaced area shall be removed and restored to the original approved condition.
   3. Coconut Fiber Blanket Maintenance
      a. Inspect the coconut fiber blanket in accordance with the paragraph titled "Inspections," of this section. Any required repairs shall be made promptly. Should

the coconut fiber blanket be torn or punctured or otherwise damaged, or the overlaps disturbed or displaced, Contractor shall repair damage and correct disturbances. Repairs shall consist of a patch placed over the damaged area. Patches shall be of the same type of coconut fiber blanket as that being patched. Patches shall extend a minimum of 18 inches beyond the damaged area, in all directions.

b. If damage to the coconut fiber blanket results in damage to the subgrade, as evidenced by subgrade pumping, intrusion, or grade distortion, the subgrade around the damage or displaced area shall be removed and restored to the original approved condition.

4. Straw Mulch Maintenance

a. Inspect the straw mulch in accordance with the paragraph titled "Inspections," of this section. Any required repairs shall be made promptly. If bare spots greater than 3 foot in diameter appear in the mulch, additional mulch shall be applied and mechanically anchored into the soil as required in the Technical Specifications.

3.4 INSPECTIONS

A. General

1. Inspect disturbed areas of the construction site; areas that have not been finally stabilized; areas used for storage of materials; areas exposed to precipitation, stabilization practices, structural practices, other controls; and areas where vehicles exit the site at least once every seven (7) calendar days and within 24 hours of the end of any storm that produces 0.5 inches or more rainfall at the site. Once disturbed areas have been stabilized, the inspection schedule may be relaxed to once every month with the Engineer’s approval.

B. Inspections Details

1. Inspect disturbed areas and areas used for material storage that are exposed to precipitation for evidence of, or the potential for, sediment entering the drainage system. Observe erosion and sediment control measures identified in the SWPPP to ensure that they are operating correctly. Inspect discharge locations or points to ascertain whether erosion control measures are effective in preventing significant impacts to receiving waters. Inspect locations where vehicles exit the site for evidence of offsite sediment tracking.

C. Inspection Reports

1. For each inspection conducted, prepare a report summarizing the scope of the inspection, name(s) and qualifications of personnel making the inspection, the date(s) of the inspection, major observations relating to the implementation of the SWPPP, maintenance performed, and actions taken. Furnish the report to the Engineer within 24 hours of the inspection. A copy of the inspection report shall be maintained on the job site.

END OF SECTION

SECTION 01 70 00

EXECUTION AND CLOSEOUT REQUIREMENTS

PART 1 GENERAL

1.1 SECTION INCLUDES

A. Submittals

B. Closeout procedures.

C. Final cleaning.

D. Restoration

E. Disposal of waste materials

F. Project record documents.

1.2 SUBMITTALS

A. Record Documents: Contractor shall submit Record Documents including As-built Survey data and Record Drawings.

1.3 CLOSEOUT PROCEDURES

A. Submit written certification that Contract Documents have been reviewed, Work has been inspected, and that Work is complete in accordance with Contract Documents and ready for Engineer's review.

B. Submit final Application for Payment identifying total adjusted Contract Sum, previous payments, and sum remaining due.

1.4 FINAL CLEANING

A. Execute final cleaning prior to final project assessment.

B. The exposed surfaces of the following materials shall be cleaned as listed herein as necessary:
   1. Gravel roads – Remove mud, dirt, and redress
   2. Other surfaces – Remove all blemishes. Leave clean, uniform, and dust free
   3. Premises and site – Remove all trash, debris, and surplus excavated material.

C. Remove waste and surplus materials, rubbish, and construction facilities from site.

1.5 RESTORATION

A. All areas disturbed by the Contractor's operation shall be restored as specified herein. This shall include, but not be limited to, staging and stockpiling areas, construction strips, access roads and all areas within the limits of work.

B. Final restoration shall include seeding and acceptance by the Engineer. Disassemble and remove all temporary construction facilities constructed by the Contractor and leave the site in an orderly and restored condition.

C. Preserve signs, markers, guard rails, bollards, survey control points, and fences in their existing locations and conditions unless written permission is obtained from the Engineer for their removal and restoration or their replacement. Upon approval from the Engineer, remove such facilities as conflict with the design when grading operations begin and store them to keep them clean and in their existing condition. Restore them to their previous locations or new locations as directed. Repair or replace damaged items as directed by the Engineer, at no additional cost to Engineer.

D. Restoration of turf areas shall be performed in accordance with Section 32 92 19 – Seeding.

E. Restoration of TRM/FGM armor and coconut fiber blanket areas shall be performed in accordance with Section 31 35 19 – Geosynthetic Slope Protection.

F. Gravel surfaces shall be restored to their condition prior to being disturbed.

1.6 DISPOSAL OF WASTE AND EXCESS MATERIALS

A. Construction waste and excess construction materials shall be disposed of offsite in accordance with all laws and regulations or as directed by the Engineer. Contaminated excavated material will be disposed by the Engineer.

1.7 PROJECT RECORD DOCUMENTS

A. Maintain on site one set of the following record documents; record actual revisions to the Work:
   1. Drawings.
   2. Specifications.
   3. Addenda.
   4. Change Orders and other modifications to the Contract.
   5. Reviewed Shop Drawings, Product Data, and Samples.
   6. Manufacturer's instruction for assembly, installation, and adjusting.

B. Ensure entries are complete and accurate, enabling future reference by Engineer.

C. Store record documents separate from documents used for construction.

D. Record information concurrent with construction progress, not less than weekly.

E. Specifications: Legibly mark and record at each product section description of actual products installed, including the following:
   1. Manufacturer's name and product model and number.

2. Product substitutions or alternates utilized.
3. Changes made by Addenda and modifications.

F. Record Drawings: Legibly mark each item to record actual construction including:
1. Measured horizontal and vertical locations of underground utilities and appurtenances, referenced to permanent surface improvements.
2. Field changes of dimension and detail.
3. Details not on original Contract drawings.

G. As-Built Survey: An As-Built Survey of the finished grades shall be performed by an independent licensed surveyor, and the Contractor shall submit a CAD file and/or point file data of finished grades.

H. Submit documents to Engineer with or before final Application for Payment.

PART 2 PRODUCTS - Not Used

PART 3 EXECUTION

3.1 CONTRACTOR'S INDEPENDENT SURVEYOR

A. Contractor shall employ and pay for services of an independent surveyor licensed in the State of Oklahoma.

B. Surveys shall be conducted to verify as-built construction to the lines and grades indicated on the Drawings. All surveys for elevation shall be to the nearest 0.1 feet plus or minus 0.05 feet and for horizontal distances shall be to plus or minus 0.1 feet.

C. After each survey, Contractor shall submit report to Engineer indicating observations and results of survey. Contractor's independent surveyor shall provide interpretation of survey. Include the following:
1. Date issued.
2. Project title and number.
3. Names of field personnel.
4. Date and time of survey.
5. Identification of product and specifications section.
6. Location at the site.
7. Description of survey (excavation, final grade, etc.).
8. Electronic survey data in .csv format.
9. 3 dimensional lines of slope/grade changes, (AutoCAD).

D. Surveying and employment of surveyor shall not relieve Contractor of obligation to perform Work in accordance with requirements of Contract Documents.

E. Re-surveying required because of non-conformance to specified requirements shall be performed by independent surveyor at no additional cost to Engineer.

F. Locate and protect survey control and reference points. Promptly notify Engineer of discrepancies discovered.

G. Control datum for survey is that shown on Drawings.

H. Establish elevations and lines using recognized engineering survey practices.

I. Maintain complete and accurate log of control and survey work as Work progresses.

3.2 TESTING AND INSPECTION SERVICES

A. CONTRACTOR shall employ and pay for services of an independent geotechnical testing agency, and analytical laboratory to perform specified testing.

B. The independent firm shall perform tests, inspections and other services specified in individual specification sections.

C. Testing, inspections and source quality control may occur on or off project site.

D. After each test, Contractor shall submit report to Engineer indicating observations and results of testing and indicate compliance or non-compliance with Contract Documents. Contractor's independent geotechnical engineer shall provide interpretation of testing. Include the following:
   1. Date issued.
   2. Project title and number.
   3. Name of inspector.
   4. Date and time of sampling or inspection.
   5. Identification of product and specifications section.
   6. Location of test.
   7. Type of inspection or test.
   8. Date of test.
   9. Results of tests.

E. Testing and employment of testing agency shall not relieve Contractor of obligation to perform Work in accordance with requirements of Contract Documents.

F. Re-testing or re-inspection required because of non-conformance to specified requirements shall be performed by independent firm at no additional cost to Engineer.

G. Limits On Testing Agency:
   1. Agency may not release, revoke, alter, or enlarge on requirements of Contract Documents.
   2. Agency may not approve or accept any portion of the Work.

3.3 FINAL WALKTHROUGH

A. After completion of restoration and cleanup activities and upon receiving the Contractor's written request for a substantial completion inspection, the Engineer will perform a (Pre-final) walk-through of the site area with the Contractor's representative(s). The Engineer shall identify and document, via a punch list, the additional construction and submittal items required before the Engineer will declare "substantial completion" of the Contract. If, in the opinion of the Engineer, the work has been performed and site restored in accordance with the drawings and specifications, a "Certificate of Substantial Completion" shall be issued. If, in the opinion of the Engineer, the work is not completed in accordance with the drawings and specifications, no "Certificate of Substantial Completion" will be issued and another walk-through will be scheduled. All punch list items identified during the walk-through(s) shall be addressed to the satisfaction of the Engineer. Final payment will not be made until all of the punch list items are resolved to the satisfaction of the Engineer during a final walk through.

END OF SECTION

DIVISION 31 – EARTHWORK

31 10 00	SITE CLEARING
31 23 16	EXCAVATION
31 23 23	FILL
31 34 19	GEOSYNTHETIC SOIL REINFORCEMENT
31 35 19	GEOSYNTHETIC SLOPE PROTECTION
31 37 00	RIPRAP

SECTION 31 10 00

SITE CLEARING

PART 1 GENERAL

1.1 SUMMARY

A. Section Includes:
1. Clearing trees and vegetation in work areas.
2. Clearing and relocating designated woodchips.
3. Clearing and relocating designated riprap and rock.
4. Removing existing straw wattles and silt fence.
5. Removing abandoned utilities.

PART 2 PRODUCTS - Not Used

PART 3 EXECUTION

3.1 EXAMINATION

A. Verify existing conditions before starting work.

B. Verify existing plant life designated to remain is tagged or identified.

C. Identify waste area for placing removed materials.

3.2 PREPARATION

A. Call Oklahoma One-Call System at (800) 522-OKIE, or dial 811 and receive clearance not less than two working days before performing Work.
1. Request underground utilities to be located and marked within and surrounding construction areas.

3.3 PROTECTION

A. Locate, identify, and protect utilities from damage unless drawings indicate otherwise or Engineer approves their removal.

B. Protect bench marks, survey control points, and existing structures from damage or displacement.

C. Protect trees not shown to be removed on Drawings, unless approved otherwise by Engineer.

3.4 CLEARING

A. Clear trees as required for access to site and execution of Work to the existing ground surface.

B. Trees and limbs, if any, without soil attached shall be chipped and stockpiled.

C. Clear and relocate woodchips as shown on the Drawings. Woodchips shall be relocated to areas that already contain woodchips, as indicated on the Drawings.

D. Clear and relocate existing riprap as shown on the Drawings.

3.5 REMOVAL

A. Remove abandoned utilities found in washout and dispose off-site.

B. Remove existing straw wattles and silt fences as shown on the Drawings or as directed by Engineer.

C. Remove boulders from excavation and stockpile as shown on the Drawings.

D. Do not burn or bury materials on site, unless specifically stated otherwise. Leave site in clean condition.

END OF SECTION

SECTION 31 23 16

EXCAVATION

PART 1 GENERAL

1.1 SUMMARY

A. Section Includes:
   1. Excavation of on-site material.

PART 2 PRODUCTS - Not Used.

PART 3 EXECUTION

3.1 PREPARATION

A. Identify utilities and perform clearing in accordance with Section 31 10 00 – Site Clearing.

B. Identify required lines, levels, contours, and datum.

C. Prevent damage to trees.

D. Notify the Ardmore City Water Department 2 weeks before excavation around the water line. Contact Shawn Geurin at 580-221-5402, or Blake Rudd at 580-221-5401.

E. Notify Chickasaw Nation Telephone before excavation around the fiber optic line. The contact number is 580-622-2111.

F. Notify ODOT before construction in the Highway 142 right-of-way. Contact Jeff Pearl at 405-522-5195.

G. Protect from damage utilities indicated to remain.

H. Protect bench marks and survey control points from excavating equipment and vehicular traffic.

3.2 EXCAVATION

A. Notify Engineer of unexpected subsurface conditions.

B. Stockpile excess excavated material in area designated on Drawings as Spoil Area.

C. Repair or replace items indicated to remain if they are damaged by excavation.

D. If subsurface material is apparently contaminated, as indicated by dry, asphalt like material, contain the subsurface material in new 55-gallon drums with covers and store drums in staging area for disposal by Engineer. Decontaminate excavation equipment with high pressure hot

water spray. Collect wash water in new 55-gallon drums with covers, and store drum(s) in staging area for disposal by others.

3.3 PROTECTION

A. Prevent displacement or loose soil from falling into excavation; maintain soil stability.

B. Protect structures, utilities and other facilities from damage caused by settlement, lateral movement, undermining, washout, and other hazards created by earth operations.

END OF SECTION

SECTION 31 23 23

FILL

PART 1 GENERAL

1.1 SUMMARY

A. Section Includes:
1. Site Grading
2. Clay fill
3. Topsoil
4. Gravel

1.2 REFERENCES

A. ASTM International:
1. ASTM D698 - Standard Test Method for Laboratory Compaction Characteristics of Soil Using Standard Effort (12,400 ft-lbf/ft3 (600 kN-m/m3)).
2. ASTM D6938 - Standard Test Method for In-Place Density and Water Content of Soil and Soil-Aggregate by Nuclear Methods (Shallow Depth).
3. ASTM D2487 - Standard Classification of Soils for Engineering Purposes (Unified Soil Classification System).
4. ASTM D1556 - Standard Test Method for Density and Unit Weight of Soil in Place by the Sand-Cone Method.
5. ASTM D1557 - Standard Test Methods for Laboratory Compaction Characteristics of Soil Using Modified Effort (56,000 ft-lbf/ft3 (2,700 kN-m/m3)).
6. ASTM D2167 - Standard Test Method for Density and Unit Weight of Soil in Place by the Rubber Balloon Method.
7. ASTM D2922 - Standard Test Method for Density of Soil and Soil-Aggregate in Place by Nuclear Methods (Shallow Depth).
8. ASTM D3017 - Standard Test Method for Water Content of Soil and Rock in Place by Nuclear Methods (Shallow Depth).

1.3 SUBMITTALS

A. Section 01 33 00 - Submittal Procedures: Requirements for submittals.

B. Samples: Submit, in air-tight containers, 10 lb sample of each fill material to the testing laboratory for material classifications. See section 3.9 Field Quality Control for testing requirements.

C. Materials Source: Submit location of each material source and testing results of 1 sample for every 15,000 CY verifying that the material does not contain contaminates of concern. Testing laboratory credentials shall be reviewed and approved by the Engineer.

D. Geotechnical Testing: The contractor shall submit results of geotechnical testing. See section 3.9 Field Quality Control for testing requirements.

PART 2 PRODUCTS

2.1 FILL MATERIALS

A. Contractor shall provide fill materials.

B. Material shall not be transported until Engineer has approved geotechnical test results.

C. Topsoil: Topsoil shall be a mix of 80% topsoil and 20% compost. Topsoil shall be soils classified as CL, CH, ML, MH, CL-ML, OL, OH, or Pt in accordance with ASTM D2487 and free of subsoil, roots, grass, weeds, large stone, and foreign matter. Compost shall be humus-like material made from the decomposition of organic materials, screened with ½ inch or less screen opening, and free of all inorganic debris. Test borrow material for contaminates of concern including volatiles, semi-volatiles, and metals. Borrow material with contaminates of concern will not be accepted. Topsoil source shall be located within 20 miles of the site.

D. Clay Fill: Soils classified as CL, CH, ML, SM, or SC in accordance with ASTM D2487. Fill source shall be located within 20 mile of the site. Test borrow material for contaminates of concern including volatiles, semi-volatiles, and metals. Borrow material with contaminates of concern will not be accepted.

E. Gravel: Clean and graded pea gravel with 100% passing the ¾-inch sieve, 90% passing the ½-inch sieve, and no more than 10% passing the #4 sieve.

PART 3 EXECUTION

3.1 EXAMINATION

A. Verify fill materials have been tested and approved by Engineer prior to transporting fill material.

B. Verify substrate base has been contoured and compacted.

3.2 SITE GRADING

A. Till surface to a depth of 3 inches and grade smooth.

B. Fill rill erosion with on-site soils.

C. Make gradual grade changes. Blend slope into level areas.

3.3 PREPARATION FOR CLAY FILL

A. Scarify subgrade surface to depth of 3 inch.

B. Proof roll to identify soft spots; excavate 6 inches of soft material, fill, and compact to density equal to or greater than requirements for subsequent fill material.

C. Protect existing structures, fences and utilities.

3.4 BACKFILLING CLAY FILL

A. Backfill areas to contours and elevations with unfrozen materials.

B. Systematically backfill to allow maximum time for natural settlement. Do not backfill over porous, wet, frozen or spongy subgrade surfaces.

C. Place fill material in continuous 8 inch thick layers and compact.

D. Employ placement method that does not disturb or damage other work.

E. Maintain optimum moisture content of backfill materials to attain required compaction density.

F. Make gradual grade changes. Blend slope into level areas.

3.5 SUBSTRATE PREPARATION FOR TOPSOIL

A. Eliminate uneven areas and low spots.

B. Remove debris, roots, branches, stones, in excess of 2 inch in size.

C. Scarify surface to depth of 3 inches where topsoil is scheduled.

3.6 PLACING TOPSOIL

A. Place topsoil in areas and to thickness shown on the drawings.

B. Fine grade topsoil to eliminate rough or low areas. Maintain profiles and contour of subgrade.

C. Remove roots, weeds, rocks, and foreign material while spreading.

D. Lightly compact placed topsoil.

3.7 TOLERANCES

A. Clay Fill: Plus or minus 0.1 feet.

B. Topsoil: Plus or minus 0.1 feet.

3.8 COMPACTION

A. Contractor shall compact clay fill to a minimum of 95% of the maximum dry density in accordance with ASTM D698. Material that is shown to be less than 95% of the maximum dry density shall be reworked by the Contractor and retested until the material meets the compaction requirement at no additional cost to the Engineer.

3.9 FIELD QUALITY CONTROL

A. Section 01 40 00 - Quality Requirements.

B. Contractor's independent Geotechnical Engineer shall test fill materials in accordance with the following table.

Test	Test Method	Fill Types	Pre-Construction Frequency	Construction Frequency
Proctor	ASTM D 698	Clay Fill	0	1 per fill type 1 per channel
Density	ASTM D 6938	Clay Fill	0	1 per fill type 1 per channel
Material Classifications	ASTM D 2487	Clay Fill Topsoil	1 per fill type, 1 per 1,000 CY	0

C. When tests indicate Work does not meet specified requirements, continue compactive effort and retest.

3.10 PROTECTION OF FINISHED WORK

A. Section 01 70 00 - Execution and Closeout Requirements: Protecting finished work.

B. Prohibit construction traffic over topsoil.

C. Reshape and re-compact fills subjected to vehicular traffic.

D. Seed finished areas within 7 days in accordance with Section 32 92 19 – Seeding to prevent erosion and dust. Contractor shall apply water to suppress dust until seeded. Contractor shall restore any eroded areas to existing contours and elevations prior to seeding.

END OF SECTION

SECTION 31 34 19

GEOSYNTHETIC SOIL REINFORCEMENT

PART 1 GENERAL

1.1 SCOPE OF WORK

A. Section Includes:
   1. Geotextile Filter Fabric

1.2 SUBMITTALS

A. Section 01 33 00 - Submittal Procedures: Requirements for submittals.

B. Geotextile Product Data: The Contractor shall submit copies of manufacturer's literature discussing physical characteristics, application, and installation instructions for geotextile material.

1.3 REFERENCES

A. ASTM International:
   1. ASTM D3786 - Hydraulic Bursting Strength of Knitted Goods and Nonwoven Fabrics-Diaphram Bursting Tester Method
   2. ASTM D4354 - Sampling of Geosynthetics for Testing
   3. ASTM D4355 - Deterioration of Geotextiles from Exposure to Ultraviolet Light and Water (Xenon-Arc Type Apparatus)
   4. ASTM D4491 - Water Permeability of Geotextiles by Permittivity
   5. ASTM D4632 - Grab Breaking Load and Elongation of Geotextiles
   6. ASTM D4751 - Determining Apparent Opening Size of a Geotextile
   7. ASTM D4833 - Index Puncture Resistance of Geotextiles, Geomembranes, and Related Products
   8. ASTM D4873 - Identification, Storage, and Handling of Geotextiles

1.4 DELIVERY, STORAGE, AND HANDLING

A. Geotextiles
   1. Geotextiles shall be labeled, handled, and stored in accordance with ASTM D 4873 and as specified herein. Each roll shall be wrapped in an opaque and waterproof layer of plastic during shipment and storage. The plastic wrapping shall not be removed until deployment. Each roll shall be labeled with the manufacturer's name, geotextile type, lot number, roll number, and roll dimensions (length, width, gross weight). Geotextile or plastic wrapping damaged as a result of storage or handling shall be repaired or replaced, as directed. Geotextile shall not be exposed to temperatures in excess of 140 degrees F (or less if recommended by the manufacturer).
   2. No hooks, tongs, or other sharp instruments shall be used for handling geotextile. Rolls shall not be lifted by use of cables or chains in contact with the geotextile. Geotextile shall not be dragged along the ground.

PART 2 PRODUCTS

2.1 GEOTEXTILE MATERIAL

A. General Requirements

1. Geotextile shall be Mirafi N-series Model 1100N or Engineer-approved equivalent. The geotextile shall be a nonwoven pervious sheet of polymeric material that is chemically resistant to the conditions it will be exposed to. Fibers used in the manufacture of geotextile material shall consist of long-chain synthetic polymers composed of at least 85 percent by weight polypropylenes, polyesters, polyamides, polyethylene, polyolefins, or polyvinylidene-chlorides. Stabilizers and/or inhibitors shall be added to the base polymer if necessary, to make the filaments resistant to deterioration by ultraviolet light, oxidation, and heat exposure. Reclaimed or recycled fibers or polymer shall not be added to the formulation. Geotextile shall be formed into a stable network such that the filaments or yarns retain dimensional stability relative to each other, including the selvages. The geotextile shall be free of defects and shall meet or exceed the minimum average roll values below when measured in the weakest principal direction:

Fabric Properties	Requirements	Test Method
Grab tensile strength, lbs.	250 (min.)	ASTM D 4632
Elongation @ Failure, %	50 (min.)	ASTM D 4632
Mullen burst strength, psi	500 (min.)	ASTM D 3786
Puncture strength, lbs.	140 (min.)	ASTM D 4833
Apparent opening size (US Sieve)	70-120	ASTM D 4751
Permittivity, sec-1	1.0	ASTM D 4491
Ultraviolet radiation stability, %	70 (min.)	ASTM D 4355

2. Prior to use, geotextile shall be stored in a clean, dry place, out of direct sunlight, not subject to extremes of either hot or cold, and with manufacturer's protective cover in place.

B. Sampling and Testing

1. Provide manufacturer's certificate of compliance signed by an authorized official of the manufacturer attesting that the geotextile(s) meet the requirements if these specifications. The certificate shall also state the length and width of fabric supplied on each roll.

2.2 SECURING PINS/STAKES

A. Securing pins used to secure geotextile shall be of the size and type recommended by the manufacturer unless otherwise specified.

B. If used, wooden stakes shall be cut from standard 2x4 lumber, to length as recommended by geotextile manufacturer's instructions. Stakes shall be cut diagonally across the board flats to produce a triangular configuration.

C. Unless otherwise recommended by the manufacturer, securing pins shall be steel or fiberglass formed as a "U", "L", or "T" shape or contain "ears" to prevent total penetration. Steel washers shall be used on all but the "U" shaped pins.

PART 3 EXECUTION

3.1 PREPARATION OF SURFACE/SUBGRADE

A. Slopes shall be trimmed to uniform grades as shown in the Drawings. All depressions shall be filled with suitable dry material which shall be thoroughly tamped or otherwise compacted to insure stability. Soft, unstable materials shall be removed and replaced with suitable material which shall be thoroughly tamped or otherwise compacted to insure stability. This work shall be executed carefully so that the finished earth surface will conform to the grades and slopes of the neat lines of the bottom surface of the riprap as shown on the Drawings. No raised places, bumps, or depressions will be permitted. Work shall be in accordance with Section 31 23 23 Fill.

3.2 GEOTEXTILE INSTALLATION

A. Surface/Subgrade Preparation
   1. Surfaces on which geotextile is to be placed shall be compacted and graded to the lines and grades as specified in Section 31 23 23 Fill, and as indicated on the Drawings. Remove all sharp or protruding objects from subgrade surface. The soil surface shall be graded reasonably smooth (no depressed, void, soft, or uncompacted areas) and free of loose rock and clods, holes, depressions, projections, or other foreign matter.
   2. The prepared soil surface shall be examined by the Engineer prior to placement of the geotextile.

B. Placement
   1. Install on the approved surface at the locations and in accordance with the details specified and indicated in the Drawings.
   2. Install in accordance with manufacturers recommendations.
   3. Unroll geotextile vertically downslope along the installation area, on prepared banks, and secure to prevent slippage, folding, wrinkling, or other movement. Loosely lay (do not stretch) material in such a manner that it will conform to surface irregularities when material is placed against it.
   4. Geotextile may be folded and overlapped to permit proper placement in the designated area.
   5. Geotextile shall be joined by overlapping a minimum of 18 inches unless otherwise specified, and secured against the underlying foundation material. The upstream or up-slope geotextile shall overlap the abutting down-slope geotextile.
   6. Securing pins, approved and provided by the geotextile manufacturer, shall be placed along the edge of the panel or the material shall be rolled in such a manner to adequately hold it in place during installation.
   7. At vertical laps, securing pins shall be inserted through both layers along a line through the approximate midpoint of the overlap. At horizontal laps and across slope laps, securing pins shall be inserted through the bottom layer only. Securing pins shall be placed along a line approximately 2 inches in from the edge of the placed geotextile at intervals not to exceed 12 feet unless otherwise specified. Additional pins shall be installed as necessary and where appropriate, to prevent slippage or movement of the geotextile. The use of securing pins shall be held to the minimum necessary. Pins are to be left in place unless otherwise specified.
   8. Geotextile shall not be placed until it can be anchored and protected with the specified covering within 48 hours. In no case shall material be dropped on uncovered geotextile from a height greater than 2 feet.

C. Repair

1. Should the geotextile be torn or punctured or otherwise damaged, or the overlaps disturbed or displaced, Contractor shall repair damage and correct disturbances. Repairs shall consist of a patch placed over the damaged area. Patches shall be of the same type of geotextile as that being patched. Patches shall extend a minimum of 18 inches beyond the damaged area, in all directions.
2. If damage to the geotextile results in damage to the subgrade, as evidenced by subgrade pumping, intrusion, or grade distortion, the subgrade around the damage or displaced area shall be removed and restored to the original approved condition.

3.3 EXCESS MATERIAL DISPOSAL

A. Contractor shall dispose of all excess material and material not suitable for use onsite, at an appropriate offsite disposal facility, unless directed by the Engineer.

END OF SECTION

SECTION 31 35 19

GEOSYNTHETIC SLOPE PROTECTION

PART 1 GENERAL

1.1 SCOPE

A. Section Includes:
   1. geosynthetic coconut fiber erosion control blanket.
   2. turf reinforcement mat with flexible growth medium infill (TRM/FGM Armor).

1.2 SUBMITTALS

A. Submittals shall be made as specified in Section 01 33 00 Submittal Procedures.

B. Installer Qualifications: The Contractor shall submit installer qualifications meeting the requirements of this section.

C. Coconut Fiber Blanket Product Data: The Contractor shall submit copies of manufacturer's literature discussing physical characteristics, application, and installation instructions for Coconut Fiber Blanket.

D. TRM/FGM Armor Product Data: The Contractor shall submit copies of manufacturer's literature discussing physical characteristics, application, and installation instructions for TRM/FGM Armor.

1.3 DELIVERY, STORAGE AND HANDLING

A. Deliver materials and products in UV and weather-resistant factory-labeled packages. Store and handle in strict compliance with manufacturer's instructions and recommendations. Protect from damage, weather, excessive temperatures and construction operations.

1.4 QUALIFICATIONS

A. Installer: Company specializing in performing work of this section with minimum 3 years documented experience or approval of Engineer.

PART 2 PRODUCTS

2.1 MANUFACTURERS/OR THEIR REPRESENTATIVES

A. North American Green
   14649 Highway 41 North
   Evansville, Indiana 47711
   800-772-2040
   www.nagreen.com

B. PROFILE Products LLC
750 Lake Cook Road—Suite 440
Buffalo Grove, IL 60089
800-508-8681 (Fax 847-215-0577)
www.profileproducts.com

C. GreenSource Environmental
3301 NE 50th
Oklahoma City, OK 73121
405-808-0520
www.gseinokc.com

2.2 MATERIALS

A. Coconut Fiber Blanket: Coconut Fiber erosion control blanket shall be SC150, as manufactured by North American Green, for all specified areas. Equivalent products are acceptable with Engineer's approval.

1. The Coconut Fiber TRM shall meet the following properties:

Property	Test Method	Required Value
Thickness	ASTM D6525	0.39 in (9.91 mm)
Resiliency	ECTC Guidelines	0.75
Water Absorbency	ASTM D1117	2.85
Mass/Unit Area	ASTM 6475	11.44 oz/yd2 (388 g/m2)
Swell	ECTC Guidelines	0.3
Smolder Resistance	ECTC Guidelines	Yes
Stiffness	ASTM D1388	1.11 oz-in
Light Penetration	ECTC Guidelines	0.087
Tensile Strength –MD	ASTM D6818	146.6 lbs/ft (2.17 kN/m)
Elongation – MD	ASTM D6818	0.269
Tensile Strength – TD	ASTM D6818	147.6 lbs/ft (2.19 kN/m)
Elongation – TD	ASTM D6818	0.252

B. Turf Reinforcement Mat: TRM shall be Enkamat 7020, or equivalent with approval from Engineer, manufactured for the purpose of permanent channel lining and turf reinforcement. The TRM shall be made from 100% synthetic material and contain no biodegradable or photodegradable components or materials.

1. The TRM shall be a homogeneous, three-dimensional matrix made of continuous monofilament yarns which are thermally fused at the crossover points to provide a structure that will maintain its three dimensional stability without laminated or stitched layers. No nettings or stitching shall be permitted. The TRM shall have a minimum 95% open space available for soil, FGM and root interaction. The TRM shall not lose its structural integrity and shall not unravel or separate when TRM is cut in the field.

2. The TRM shall exhibit no buoyancy factor (i.e., the specific gravity of the fibers used should be greater than 1.0) so as to allow the TRM to maintain intimate contact with the soil (particularly between fasteners) under low flow or submersed conditions.

3. The TRM shall meet the following properties:

Property	Test Method	Units	Value
Mass Per Unit Area	ASTM D 6566	oz/yd^2	12.0
Thickness (Min)	ASTM D 6525	inches	0.75
Tensile Strength (MD)	ASTM D 6818	lb/ft	240.0
Area Holding Capacity	Calculated	in^3/yd^2	500
Light Penetration (Min)	ASTM D6567	%	50
Ground Cover (Max)	ASTM D6567	%	50
UV Resistance (1000 hrs)	ASTM D 4355	%	95
Resiliency (Min)	ASTM D 6524	%	80
Endurance			
Functional Longevity[1]	Observed	Months	>36
Performance			
Permissible Veg. Velocity	ASTM D6460	ft/sec	20.0
Permissible Veg. Shear	ASTM D6460	lb/ft^2	17.0

[1] Functional longevity is an estimate of product functionality and is dependent upon moisture, light, microbial and other environmental conditions.

C. Flexible Growth Medium: Flexible Growth Medium for hydraulic infill of TRM shall be Flexterra® HP-FGM™, or approved equivalent, and conform to the property values as presented in this section. All components of the FGM shall be pre-packaged by the Manufacturer to assure material performance and in compliance with the following values. Under no circumstances will field mixing of additives or components be accepted.

1. Composition of the FGM shall be:
   a. Thermally Processed (within a pressure vessel) Wood Fiber: 80% ± 3% Heated to a temperature greater than 380 degrees Fahrenheit (193 degrees Celsius) for 5 minutes at a pressure greater than 50 psi (345 kPa).
   b. Crosslinked Biopolymers and Water Absorbents: 10% ± 1%.
   c. Crimped, Man-made Biodegradable Interlocking Fibers: 5% ± 1%.
   d. Micro-Pore Granules: 5% ± 1%.
   e. No chemical additives with the exception of fertilizer, soil pH modifiers, extended-term dyes and biostimulant materials should be added to this product.

2. The FGM shall meet the following properties:

Property	Test Method	Req. Value (English)
Physical		
Mass Per Unit Area	ASTM D6566[1]	12 oz/yd^2 minimum
Wet Bond Strength	ASTM D6818[1]	9 lb/ft
Ground Cover	ASTM D6567[1]	99% minimum
Water Holding Capacity	ASTM D7367	1700% minimum
Material Color	Observed	Green
Performance		
Cover Factor[2]	Large Scale Testing[4]	0.01 maximum
% Effectiveness[3]	Large Scale Testing[4]	99 % minimum
Cure time	Observed	0 - 2 hours
Vegetation Establishment	ASTM D7322[1]	800 % minimum
Yield[4]	Calculated	2.6 minimum
Kinetic Energy Absorption Potential[5]	Calculated	2.0 minimum
Environmental		
Functional Longevity[6]	ASTM D5338	Up to 18 months
Ecotoxicity	EPA 2021.0	96-hr LC50 > 100%
Effluent Turbidity	Large Scale Testing	100 NTU maximum
Biodegradability	ASTM D5338	100% minimum

[1] ASTM test methods developed for Rolled Erosion Control Products and have been modified to accommodate Hydraulically-Applied Erosion Control Products.
[2] Cover Factor is calculated as soil loss ratio of treated surface versus an untreated control surface.
[3] % Effectiveness = One minus Cover Factor multiplied by 100%.
[4] Yield = (Mass per Unit Area)*(Thickness)*(Ground Cover Percentage).
[5] Kinetic Energy Absorption Potential = (Wet Bond Strength)*(Thickness)
[6] Functional Longevity is the estimated time period, based upon ASTM D5338 testing and field observations, that a material can be anticipated to provide erosion control and agronomic benefits as influenced by composition, as well as site-specific conditions, including; but not limited to – temperature, moisture, light conditions, soils, biological activity, vegetative establishment and other environmental factors.

2.3 ACCESSORIES

A. Anchoring Devices: The Coconut Fiber Blanket and TRM shall be secured in place using heavy-duty metal staples or pins. The metal staples shall be U-shaped, a minimum of 12 inch long (each leg), one and one half (1-1/2) inches wide, and shall be fabricated from 8 gauge diameter metal wire. If difficulties arise installing the staples, then 10 inch pins fabricated from 8 gauge with one and one half (1-1/2) inch diameter washer or 7 inch gutter spike with one and one half (1-1/2) inch diameter washer shall be used, at Engineer's direction. In some cases where loose soil conditions exists and anchors of stated length do not properly secure the TRM to the ground, then longer staples should be used.

PART 3 EXECUTION

3.1 PREPARATION

A. The installation site shall be prepared by clearing, grubbing and excavation or filling the area to the design grade.

B. The surface to receive the TRM shall be prepared to relatively smooth conditions free of obstructions, rocks, dirt clods, roots, stumps, depressions, debris and soft or low density pockets of material. The material shall be capable of supporting a vegetative cover.

C. Erosion features such as rills and gullies must be graded out of the surface before TRM deployment. Contractor shall conduct smooth roll drum compaction before deploying TRM to make sure the TRM makes immediate contact with the soil and to ensure that the soil has been compacted.

D. Cut trenches for initial anchor trenches, termination trench and longitudinal anchor trenches (12 inches wide and 12 inches in depth) as shown on the drawings.

3.2 COCONUT FIBER BLANKET INSTALLATION

A. Install to the lines and grades as shown on the drawings.

B. Care shall be taken during installation to avoid damage occurring to the blanket as a result of the installation process. Should the blanket be damaged during installation, a blanket patch shall be placed over the damaged area extending 3 ft beyond the perimeter of the damage.

C. Construct top anchor trench 1-3 feet beyond crest of slope, or as illustrated in drawings or shown in manufacturers recommended installation guidelines. Position blanket roll at crest of slope with sufficient material to line the entire anchor trench plus enough material left over to cover the trench. Position adjacent rolls to facilitate 6-inch overlaps. Anchor blanket in trench with appropriate pins/staples at 1' centers. Once several rolls are anchored in trench, begin to backfill and compact trench to original elevation. The preferred method of deploying roll down slope is to stand in front of the roll and pin it as it rolls out down the slope, minimizing foot traffic on the blanket, which will eliminate depressions under the blanket. Always allow the blanket to drape over the soil, never pulling it taut, to minimize tenting. Place additional pins into any apparent depressions to maintain contact with the soil.

D. Consult blanket manufacturer’s technical representative or local distributor for installation assistance.

3.3 TRM INSTALLATION

A. Install to the lines and grades as shown on the drawings.

B. Care shall be taken during installation to avoid damage occurring to the TRM as a result of the installation process. Should the TRM be damaged during installation, a TRM patch shall be placed over the damaged area extending 3 feet beyond the perimeter of the damage.

C. Install anchoring devices at a frequency of 2 1⁄2 pins or staples per square yard. Additional anchoring devices may be required depending on site conditions or alignment of the slope or channel. Always staple (1' centers) the seams between individual TRM rolls.

D. When overlapping successive TRM rolls, the rolls shall be overlapped upstream over downstream and/or upslope over downslope.

E. Position second TRM with a minimum 4-inch overlap of the previous TRM and secure it into the anchor trench. After entire width area is installed with the TRM, then backfill and compact the anchor trench.

F. For channels, begin at the downstream end in the center of the channel. Inspect trenches for position accuracy and depth and re-dig to required dimensions. Dig an initial anchor trench at downstream end of the channel, check slot trenches every 50 feet (minimum), and longitudinal anchor trenches 1-3 feet beyond top of channel. Unroll approximately 10' of the TRM, positioning the roll face down (as it unrolls) over the initial anchor trench, extending several inches beyond the trench with the roll sitting on the downstream side of the anchor trench. Positioning roll in this manner permits backfilling and compaction of soil into the trench while allowing installer to proceed with proper deployment of TRM by unrolling upstream, over the anchor trench.

G. Position second TRM with a minimum 4-inch overlap of the previous TRM and secure it into the anchor trench. After entire width area is installed with the TRM, then backfill and compact the anchor trench.

H. Continue deploying TRM upstream to the next check slot. Overlay a minimum of 18 inches the ends of rolls with the next roll(s) being deployed, or position in bottom of check slot, anchor and backfill and compact check slots. Continue the processes until you reach the upstream starting point of the TRM.

I. Anchor TRM in trench with appropriate pins or staples at 1' centers. Always allow the mat to drape over the soil, never pulling it taut, to minimize tenting. Place additional pins into any apparent depressions to maintain contact with the soil.

J. For slopes, construct top anchor trench 1-3 feet beyond crest of slope, or as illustrated in drawings or shown in manufacturers recommended installation guidelines. Position TRM roll at crest of slope with sufficient material to line the entire anchor trench plus enough material left over to cover the trench. Position adjacent rolls to facilitate 6-inch overlaps. Anchor TRM in trench with appropriate pins/staples at 1' centers. Once several rolls are anchored in trench, begin to backfill and compact trench to original elevation. The preferred method of deploying roll down slope is to stand in front of the roll and pin it as it rolls out down the slope, minimizing foot traffic on TRM, which will eliminate depressions under the mat. Always allow the mat to drape over the soil, never pulling it taut, to minimize tenting. Place additional pins into any apparent depressions to maintain contact with the soil.

K. Comply with manufacturer’s installation instructions and recommendations, along with the drawings and specifications. If manufacturer’s installation instructions or recommendations conflict with specifications and drawings, all conflicts shall be stated in the product substitution request in accordance with Section 01 33 00 – Submittal Procedures.

3.4 FGM INSTALLATION

A. Install to the lines and grades as shown on the drawings.

B. Apply 50% of seed to ground, following the requirements of Section 32 92 19 Seeding, and mix 50% of seed with FGM.

C. Hydraulically fill the TRM with 0.7 inches of FGM, applied with hose at close range. Application rate is 3500 lbs/acre or to the depth of where the tips of TRM are still exposed. Over-application of product may inhibit germination and plant growth. Best results and more rapid curing are achieved at temperatures exceeding 60°F (15°C). Curing times may be accelerated in high temperatures and low humidity conditions with product applied on dry soils.

D. For optimum FGM pumping and application performance, use approved mechanically agitated, hydraulic seeding and mulching machines, hose of sufficient length to reach the TRM, use of a 50 degree nozzle is highly recommended. Apply FGM from hose positioned over shoulder with nozzle approximately at chest level (48-60") to achieve optimum TRM infill.

E. Do not apply FGM during periods of precipitation or when precipitation is expected within 24 hours.

F. Measure and stake application area, to ensure proper application rates.

G. For optimum hydraulic performance and vegetative establishment, be careful not to overfill the TRM. The tips of the TRM shall be slightly exposed.

H. Comply with manufacturer's installation instructions and recommendations, along with the drawings and specifications. If manufacturer's installation instructions or recommendations conflict with specifications and drawings, all conflicts shall be stated in the product substitution request in accordance with Section 01 33 00 – Submittal Procedures.

3.5 PROTECTION OF BLANKETED AREAS

A. After placing the coconut fiber blanket and TRM/FGM armor, the area shall be protected against traffic or other use that might damage the material.

3.6 MAINTENANCE SERVICE

A. Section 01 70 00 - Execution and Closeout Requirements: Final Walkthrough.

B. The Engineer will conduct an inspection 60 days after installation to determine if the TRM/FGM armor and coconut fiber blanket are functioning. The TRM/FGM armor and coconut fiber blanket will be considered functioning if the following conditions is true:
   1. No tears in the fabric longer than 3 feet.
   2. Not more than 5 percent of total area with tenting between the soil and TRM or blanket.
   3. Not more than 10 percent of TRM without FGM infill.
   4. No staples or anchors pulled up from edges of blanket or TRM.

C. If an area TRM/FGM armor or coconut fiber blanket is inadequate as determined by the Engineer, the Contractor shall follow up with a single visit, within 2 weeks, to make repairs or reinstall in accordance with the specifications.

END OF SECTION

SECTION 31 37 00

RIPRAP

PART 1 GENERAL

1.1 SUMMARY

A. Section Includes:
   1. Riprap.
   2. Grouted Riprap.

1.2 SUBMITTALS

A. Section 01 33 00 - Submittal Procedures: Requirements for submittals.

B. Riprap Product Data: Contractor shall submit material and gradation for riprap.

C. Grout Product Data: Contractor shall submit Portland cement grout mix.

PART 2 PRODUCTS

2.1 MATERIALS

A. Rock Riprap
   1. The rock shall be limestone or other approved hard stone of good quality that will not disintegrate under action of air or water. It shall be clean and free from earth, clay or refuse. The rock shall have a density that is not less than 140 pounds per cubic foot.
   2. Determine the bulk specific gravity and absorption in accordance with ASTM D 6473. Ensure the bulk specific gravity is at least 2.25, and the maximum absorption is 6.0 percent. Ensure the loss of soundness after 20 cycles is no greater than 15 percent when tested in accordance with the U.S. Army Corps of Engineers test method CRD-C 144. Provide riprap pieces with a width and thickness at least one-third the length.
   3. Each load of rock shall be reasonably well graded from the largest to the smallest size specified. The rock shall be angular in shape to permit interlocking between the various rock sizes.
   4. Rock riprap shall conform to Type A or Type B rock riprap, as specified and indicated on the Drawings. Control of gradation shall be by visual inspection to verify that the rock is reasonably well graded and does conform to the maximum, mean and minimum weights as specified.
   5. Utilize existing riprap material as shown on the Drawings. If existing quantity of riprap material is insufficient to complete work as shown on Drawings and Specifications, supplement with Type B riprap.

Rock Riprap Gradation Requirements	
Size of Rock (Pounds)	**Percent of Total Weight Smaller than the Given Size (%)**
Type A	
154.6	100
33.0	50
2.2	Not to Exceed 10
Type B	
308.6	100
77.2	50
4.4	Not to Exceed 10

B. Portland Cement Grout
   1. Portland cement shall be ASTM C150, Type I and/or II.
   2. Water shall be potable; containing no impurities, suspended particles, algae or dissolved natural salts in quantities capable of causing: corrosion of steel, volume change increasing shrinkage cracking, efflorescence, excess air entraining.
   3. Fine aggregate shall be of washed natural sand, with a gradation in accordance with ASTM C33 and represented by smooth granulometric curve within required limits. The fine aggregate shall be free from injurious amounts of organic impurities as determined by ASTM C40.
   4. Mix portland cement, sand and water. Do not use ferrous aggregate or staining ingredients in grout mixes.

PART 3 EXECUTION

3.1 INSPECTION

A. Prior to placement, verify that materials to be installed meet Specifications.

B. Verify foundation and subgrade preparation has been completed as specified and approved by the Engineer.

C. Verify areas to receive grout.

3.2 PREPARATION OF SURFACE/SUBGRADE

A. Slopes shall be trimmed to uniform grades as shown in the Drawings. All depressions shall be filled with suitable material (soil) at optimum moisture content which shall be thoroughly tamped or otherwise compacted to insure stability. Soft, unstable materials shall be removed and replaced with suitable material which shall be thoroughly tamped or otherwise compacted to insure stability. This work shall be executed carefully so that the finished earth surface will conform to the grades and slopes of the neat lines of the bottom surface of the riprap as shown on the Drawings. No raised places, bumps, or depressions will be permitted. Work shall be in accordance with Section 31 23 23 Fill.

3.3 PLACEMENT OF RIPRAP

A. Place geotextile fabric over substrate as required in Section 31 34 19 Geosynthetic Soil Reinforcement.

B. Place riprap as indicated on Drawings.

C. Approved material shall be dumped or otherwise placed in a manner as to produce a reasonable solid mass of material within the limits indicated on the Drawings or specified by the Engineer. All material shall be placed and distributed so that there are no large accumulations of either the larger or smaller sizes of rock.

D. Height of drop onto geotextile shall be limited to 2 feet or less.

E. Any appreciable variation from the specified thickness of the riprap shall be corrected by redistributing the material.

F. Installed Thickness: As indicated on Drawings.

3.4 PLACEMENT OF GROUT

A. Do not place grout mix when the daily minimum temperature is less than 40 degrees F. Maintain at minimum temperature of 50 degrees F during the placement and the curing periods.

B. Do not place on frozen surfaces. Cover the grouted stone and heat within a range of 50 and 90 degrees F for a minimum of 24 hours prior to placing grouting materials when temperature is below 40 degrees F and dropping.

C. Thoroughly wet riprap, bedrock, and foundation surfaces. Allow excess water to drain and achieve a dry saturated surface condition.

D. Use low pressure to inject grout into the voids between stones by pumping through a maximum 2-inch diameter hose.

E. Deposit grout to fill all voids as stones are placed and to secure maximum compaction and density of the grout.

F. Place the grout from bottom to top and use sufficient grout to fill all voids between the stones. Fill all voids with grout from the subgrade level through the stone layer. Grout must penetrate to subgrade.

G. Place grout material quickly and continuously.

H. Do not use pneumatic-pressure or dry-packing methods.

I. Do not vibrate placed grout mixture, or permit placement when area is being vibrated by nearby equipment.

3.5 TOLERANCES

A. Subgrade: A finished subgrade that is reasonably smooth, compacted as specified, and free from irregular surface changes shall be provided.

B. Riprap: Finished surfaces shall conform to slope of the subgrade and be reasonably uniform and level. Finished surfaces shall match surrounding surfaces to the extent practical. The thickness of the finished surface shall be as indicated on the Drawings. Any appreciable variation from the specified thicknesses or the specified finished elevations shall be corrected by the Contractor.

C. Grout: Grout shall fill voids in riprap rock uniformly to interlock the riprap rocks. The thickness of the finished surface shall be as indicated on the Drawings. Any appreciable variation from the specified thicknesses or the specified finished elevations shall be corrected by the Contractor.

3.6 EXCESS MATERIAL DISPOSAL

A. Contractor shall dispose of all excess material and material not suitable for use onsite, at an appropriate offsite disposal facility, unless directed by the Engineer.

END OF SECTION

DIVISION 32 – EXTERIOR IMPROVEMENTS

32 92 19 SEEDING

SECTION 32 92 19

SEEDING

PART 1 GENERAL

1.1 SUMMARY

A. Section Includes:
1. Fertilizing.
2. Seeding.
3. Mulching.
4. Maintenance.

1.2 SUBMITTALS

A. Section 01 33 00 - Submittal Procedures: Requirements for submittals.

B. Seed Product Data: Contractor shall submit data for seed mix, fertilizer, and mulch. Data shall include certification that mulch is noxious weed free.

1.3 QUALITY ASSURANCE

A. Provide seed mixture in containers showing percentage of seed mix, germination percentage, inert matter percentage, weed percentage, year of production, net weight, date of packaging, and location of packaging.

1.4 DELIVERY, STORAGE, AND HANDLING

A. Deliver grass seed mixture in sealed containers. Seed in damaged packaging is not acceptable.

B. Deliver fertilizer in waterproof bags showing weight, chemical analysis, and name of manufacturer.

PART 2 PRODUCTS

2.1 SEED MIXTURE

A. 50% Bermuda Grass, 50% Native Grass Mix.

B. Date of application: April 15 – August 31

Grass Seed Kind and Variety	**Pounds Pure Live Seeds per Acre**
Bermuda Grass (common) unhulled	9
Blue Grama, VNS	1.6
Sideoats Grama, El Reno	0.6
Little Bluestem, VNS	1.2
Big Bluestem, KAW	1.6
Indiangrass, Cheyenne	1.6
Buffalograss, Texoka	0.4
Green Sprangletop, Van Horn	0.5
Switchgrass, VNS	1.4
Total	18

C. If planting is not able to be completed during the above time period due to weather or rehabilitation then the seed mix should include a cover crop to establish vegetation until permanent vegetation can be established next spring. It is recommended that a cover crop of wheat at a rate of 40-60 lbs. per acre be planted September 1 – October 30.

2.2 MULCH

A. Native grass hay (certified noxious weed free) with viable seed; 4,000 lb/acre.

B. Native or introduced grass hay (certified noxious weed free); 4,000 lb/acre.

C. Legume hay (certified noxious weed free); 4,000 lb/acre.

D. Straw (certified noxious weed free); 4,000 lb/acre.

2.3 ACCESSORIES

A. Mulching Material: Oat or wheat straw, free from weeds, foreign matter detrimental to plant life, and dry. Chopped cornstalks are not acceptable.

B. Fertilizer: Commercial grade; recommended for grass; of proportion necessary to eliminate deficiencies of topsoil.

2.4 SOURCE QUALITY CONTROL

A. Section 01 40 00 - Quality Requirements: Testing, inspection and analysis requirements.

B. Analyze soil to ascertain percentage of nitrogen, phosphorus, potash, soluble salt content, organic matter content, and pH value.

C. Provide recommendation for fertilizer and lime application rates for specified seed mix.

PART 3 EXECUTION

3.1 PREPARATION

A. Verify prepared soil base is ready to receive the Work of this section. Woodchips, storm wattles, and silt fence must be removed.

B. Prepare seeding surface to a smooth and equipment- track-free surface.

3.2 FERTILIZING

A. Apply fertilizer at application rate recommended by soil analysis.

B. Apply after smooth raking of topsoil.

C. Do not apply fertilizer at same time or with same machine used to apply seed. Apply fertilizer before seed.

3.3 SEEDING

A. Seed shall be uniformly drilled to an average depth of 1/2 inch and at the rates specified using equipment having drills not more than 6-1/2 inches apart. Row markers shall be used with the drill seeder.

B. Do not seed areas in excess of that which can be mulched on same day.

C. Do not seed immediately following rain, when ground is too dry, or when winds are over 12 mph.

D. Immediately following seeding, apply mulch to thickness of 1/8 inches.

3.4 MULCH

A. The mulch shall be fixed in place with mechanical anchoring by a V-type-wheel land packer, a scalloped-disk land packer designed to force mulch into the soil surface, or other suitable equipment.

B. Straw or hay mulch shall be spread uniformly at the rate of 2 tons per acre. Mulch shall be spread by hand, blower-type mulch spreader or other approved method. Mulching shall be started on the windward side of relatively flat areas or on the upper part of a steep slope and continued uniformly until the area is covered. The mulch shall not be bunched. All seeded areas shall be mulched on the same day as the seeding.

3.5 SEED PROTECTION

A. Do not allow equipment on seeded areas unless approved by Engineer.

3.6 MAINTENANCE SERVICE

A. Section 01 70 00 - Execution and Closeout Requirements: Final Walkthrough.

B. The Engineer will conduct an inspection 60 days after planting to determine if a satisfactory stand of vegetation has been established. A satisfactory stand of vegetation is defined as follows:
   1. No bare spots larger than 3 square feet.
   2. Not more than 10 percent of total area with bare spots larger than 1 square foot.

C. If a stand of turf is inadequate as determined by the Engineer, the Contractor shall follow up with a single visit, within 2 weeks, to add soil in rills as determined necessary at the time, prepare seed bed, seed, and mulch in accordance with the specifications.

END OF SECTION

Appendix D

Geotechnical Report

InTEC Integrated Testing and Engineering Company

"Committed to providing the best, economical and timely solutions to Geotechnical, Geological and Environmental Engineering; Construction Materials Testing and Civil Site Development"

Subsurface Exploration and Analysis
Imperial Refining Site at SH-142/Veterans Boulevard
Ardmore, Oklahoma

EA Engineering, Science and Technology
405 State Highway 121 Bypass, Suite C-100
Lewisville, Texas 75067
Attention: Mr. Brian Yost

InTEC Project No.: D101212

October 21, 2010

InTEC of DFW Metro, Inc.
350 E. Glade Road
Euless, Texas 76039
817-858-0870
Fax 817-858-0036
Texas Registration No. F-006799
Oklahoma Registration No. 4790

REGISTERED PROFESSIONAL ENGINEER
SHAWN ERIC WILSON
21920
OKLAHOMA

Shawn Wilson, P.E.
Regional Vice President

STATE OF TEXAS
JOHN A. GUNTER
47957
REGISTERED PROFESSIONAL ENGINEER

John A. Gunter, M.S., P.E
Chief Engineer

InTEC Integrated Testing and Engineering Company of DFW Metro, Inc.
Geotechnical, Environmental, & Geological Engineering • Construction Services • Civil Site Development

October 21, 2010

EA Engineering, Science and Technology
405 State Highway 121 Bypass, Suite C-100
Lewisville, Texas 75067

Attention: Mr. Brian Yost

Re: **Subsurface Exploration and Analysis**
Imperial Refining Site at SH-142/Veterans Boulevard
Ardmore, Oklahoma
InTEC Project No.: D101212

Dear Mr. Yost:

Integrated Testing and Engineering Company of DFW Metro, Inc. (InTEC) has completed a soil and foundation engineering report at the above referenced project site. The results of the exploration are presented in this report.

We appreciate and wish to thank you for the opportunity to service you on this project. Please do not hesitate to contact us if we can be of additional assistance during the Construction Materials Testing and Quality Control phases of construction.

Respectfully Submitted,

Very Truly Yours,
Integrated Testing and Engineering Company of DFW Metro, Inc.

Katryne A. Gallant

Katryne A. Gallant, P.E.
Project Manager / Civil Design Manager

Copies Submitted: Above (2)

D101212

350 E. Glade Road • Euless, Texas 76039 • (817) 858-0870 • fax (817) 858-0036 • www.intec-geotech.com

Austin	Houston	San Antonio	So. California	Denver
(512) 252-1218	(281) 371-3330	(210) 525-9033	(949) 389-0678	(303) 463-9317
fax (512) 252-1219	fax (281) 371-3334	fax (210) 525-9032	fax (949) 231-1700	fax (303) 463-9321

TABLE OF CONTENTS

Page

1.0 INTRODUCTION 1

2.0 PURPOSE AND SCOPE OF SERVICES 1

3.0 GEOTECHNICAL INVESTIGATION 2

3.1 FIELD TESTS AND MEASUREMENTS 3

3.2 FIELD LOGS 3

3.3 PRESENTATION OF THE DATA 4

3.4 LABORATORY TESTING PROGRAM 4

3.5 GENERAL SUBSURFACE CONDITIONS 5

4.0 DESIGN ENGINEERING ANALYSIS 6

5.0 LIMITATIONS 6

ILLUSTRATION SECTION

Boring Location Plan	Plate 1-1b
Boring Logs	Plates 2 thru 7
Key to Classifications and Symbols	Plate 8
Laboratory Compaction Results	
Grain Size Analysis	

EXECUTIVE SUMMARY

The soil conditions at the site at Imperial Refining Site at SH-142/Veterans Boulevard in Ardmore, Oklahoma were explored by drilling six borings to depths from 2 to 12.5-feet below the existing grade and obtaining three bulk soil samples. Laboratory tests were performed on selected soil samples to evaluate the engineering characteristics of soil strata encountered in our borings and soil samples. The purpose of the investigation was to provide design parameters for the subsurface materials at the site.

The results of our exploration, laboratory testing and engineering evaluation indicate the soils underlying this site have a moderate expansive potential. Potential vertical movement on the order of one inch was estimated.

The proposed drainage structures may be supported by drilled piers or driven piles. For drilled piers or driven piles, bearing at a depth of 10 feet below the existing grade, an allowable end bearing value of 3,000 pounds per square foot can be used. An allowable skin friction value of 200 pounds per square foot can be used for the soil below a depth of 5 feet.

Groundwater seepage was encountered at a depth of 12-feet in Boring B-1 at the time of our field exploration.

Detailed descriptions of subsurface conditions, engineering analysis, and design recommendations are included in this report.

1.0 INTRODUCTION

This report presents the results of our subsurface exploration and analysis for the Imperial Refining Site at SH-142/Veterans Boulevard in Ardmore, Oklahoma. This project was authorized by Mr. Brian Yost of EA Engineering, Science and Technology.

2.0 PURPOSE AND SCOPE OF SERVICES

The purpose of our geotechnical investigation was to evaluate the subsurface and groundwater conditions of the site and provide design parameters for the subsurface materials. Our scope of services includes the following:

1) Drilling and sampling of six borings to depths from 2 to 12.5-feet;
2) Evaluation of the in-place conditions of the subsurface soils through field penetration tests;
3) Observation of the ground water conditions during drilling operations;
4) Obtaining three bulk soil samples at locations prescribed by the Client;
5) Performing laboratory tests such as Atterberg limits, moisture content tests and unconfined compression tests;
6) Review of laboratory and field tests;
7) Compilation, generalization and analysis of the field and laboratory data according to the project requirements;
7) Estimation of potential vertical movement;
8) Development of design parameters and;

9) Consultations with Prime Professionals and members of the design team on findings and recommendations and the preparation of a written geotechnical engineering report for their use in the preparation of design and construction documents.

The Scope of Services did not include any environmental assessment for the presence or absence of wetlands or hazardous or toxic materials in the soil, surface water, groundwater, or air, on or below or around this site. Any statements in this report or on the boring logs regarding odors, colors or unusual or suspicious items or conditions are strictly for the information of the client.

3.0 GEOTECHNICAL INVESTIGATION

The field exploration to determine the engineering characteristics of the subsurface materials included a reconnaissance of the project site, drilling the borings, recovering split spoon and or Shelby tube samples and obtaining bulk soil samples. Six (6) soil test borings were drilled at the project site at locations as shown on the site plan. These borings were drilled to depths from 2 to 12.5-feet below the existing ground surface. The boring and bulk soil sample locations were selected by the Client and established in the field by the drilling crew and or field technicians.

The soil borings were performed with a drilling rig equipped with a rotary head. Conventional solid stem continuous augers were used to advance the holes and samples of the subsurface materials were sampled using thin walled tubes or a two-inch O.D. split barrel sampler (ASTM D 1586).

3.1 Field Tests and Measurements

Penetration Tests: During the sampling procedures, standard penetration tests were performed in the borings in conjunction with the split-barrel sampling. The standard penetration value (N) is defined as the number of blows of a 140-pound hammer, falling thirty inches, required to advance the split-spoon sampler one-foot into the soil. The sampler is lowered to the bottom of the drill hole and the number of blows recorded for each of the three successive increments of six inches penetration. The "N" value is obtained by adding the second and third incremental numbers. The results of the standard penetration test indicate the relative density and comparative consistency of the soils, and thereby provide a basis for estimating the relative strength and compressibility of the soil profile components.

Water Level Measurements: Water level observations were made during the boring operations and the results are noted on the boring logs. In relatively pervious soils, such as sandy soils, the indicated elevations are considered reliable ground water levels. In relatively impervious soils, the accurate determination of the ground water elevation may not be possible even after several days of observation. Seasonal variations, temperature and recent rainfall conditions may influence the levels of the ground water table and volumes of water will depend on the permeability of the soils.

3.2 Field Logs

A field log was prepared for each boring. Each log contains information concerning boring procedure; samples attempted and recovered; indications of the presence of material, such as clay and weathered limestone and observations of groundwater. It also contained an interpretation of

subsurface conditions between samples. Therefore, these logs included both factual and interpretive information.

3.3 Presentation of the Data

The final logs represent our interpretation of the contents of the field logs for the purpose delineated by our client. The final logs are included on Plates 2 thru 7 included in the Illustration Section. A key to classification terms and symbols used on the logs is presented on Plate 8.

3.4 Laboratory Testing Program

In addition to the field exploration, a supplemental laboratory testing program was conducted to determine additional pertinent engineering characteristics of the subsurface materials necessary in evaluating the design parameters. All phases of the laboratory testing program were conducted in general accordance with the indicated applicable ASTM Specifications as presented in Table No. 1.

Table No. 1

Laboratory Test	Applicable Test Standard
Liquid Limit, Plastic Limit, & Plasticity Index of Soil	ASTM D4318
Moisture Content	ASTM D2216
Standard Proctor Test	ASTM D698
Sieve Analysis	ASTM D422, ASTM D2488
Unconfined Compression Tests	ASTM D2166

In the laboratory, each sample was examined and classified by a geotechnical engineer. As a part of this classification procedure, the natural water contents of soil samples were determined. Liquid

limit and plastic limit tests were performed on representative soil samples to determine the plasticity characteristics of the different soil strata encountered. Unconfined compression tests were performed on selected Shelby tube samples. Standard Proctor tests and sieve analysis was performed on the bulk soil samples.

In summary, the tests presented in Table No. 2 were performed in the laboratory to evaluate the engineering characteristics of the subsurface materials. The results of these tests are presented on appropriate boring logs and attached plates.

Table No. 2

Type of Test	Number Conducted
Natural Moisture Content	3
Atterberg Limits	3
Standard Proctor Tests	3
Sieve Analysis	3
Unconfined Compression Tests	3[1]

3.5 General Subsurface Conditions

The soils underlying this site may be grouped into one to three generalized strata. The lines designating the interface between soil strata on the logs represent approximate boundaries. The transition between materials may be gradual. The soil stratigraphy information is presented in the boring logs, Plates 2 thru 7. The proctor results for the bulk soil samples are presented on the Laboratory Compaction Result sheets.

[1] A test was attempted on Stratum 1 of Boring B-3 but was not successful because of the presence of sand.

Groundwater seepage was observed at a depth of 12-feet in Boring B-1 during drilling operations. Groundwater levels will fluctuate with seasonal climatic variations and changes in the land use. The low permeability of the soils may require several days for groundwater to enter and stabilize in the boreholes. It is not unusual to encounter shallow groundwater during or after periods of rainfall. Surface water tends to percolate through the surface until it encounters a relatively imperious layer.

4.0 DESIGN ENGINEERING ANALYSIS

Foundation Design Considerations: The proposed drainage structure can be supported by either drilled piers or driven piles. Piers or piles extending to a depth of 10 feet below existing grade can use an allowable end bearing of 3,000 pounds per square foot. For the soil below the depth of 5 feet, an allowable skin friction of 200 pounds per square foot can be used. Skin friction above the depth of 5 feet should be neglected.

Vertical Movements: The results of our exploration, laboratory testing and engineering evaluation indicate the underlain soils at this site are of a moderate expansive potential. Potential vertical movements on the order of one inch may be anticipated for dry soil moisture conditions.

5.0 LIMITATIONS

The exploration and analysis of the subsurface conditions reported herein are considered sufficient to form a reasonable basis for the foundation design. The analysis and recommendations submitted in this report are based upon the data obtained from the three bulk soil samples and six borings

drilled at the site. If deviations from the noted subsurface conditions are encountered during construction, they should be brought to the attention of the geotechnical engineer.

The geotechnical engineer declares that the findings, recommendations, specifications or professional advise contained herein, have been made after being prepared in accordance with generally accepted professional engineering practice, in the fields of geotechnical engineering, soil mechanics and engineering geology. No other warranties are implied or expressed. This report has been prepared for the specific application of the Imperial Refining Site at SH-142/Veterans Boulevard in Ardmore, Oklahoma.

ILLUSTRATION SECTION

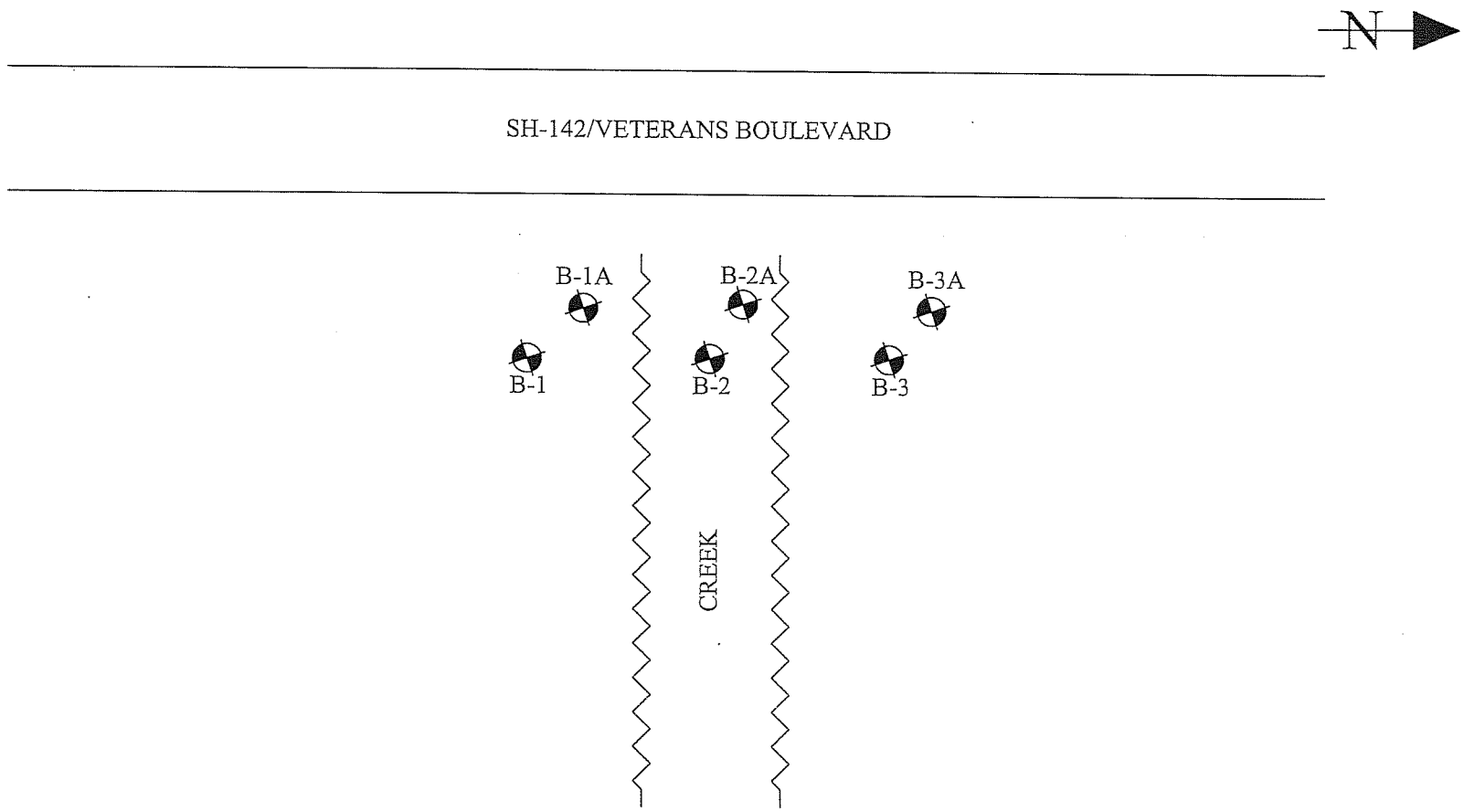

N.T.S.

PROJECT NAME **Subsurface Exploration and Analysis** EA Imperial Refining Ardmore, Oklahoma	**BORING LOCATION PLAN**	PROJECT NO. **D101212** DATE **October 5, 2010**

Integrated Testing and Engineering Company

CONTROL POINT LOCATION

BORE HOLE LOCATION

BORING LOCATION COORDINATES			
BORE	NORTHING	EASTING	ELEV.
BULK SAMPLE 1	315231.99	2237082.86	–
BULK SAMPLE 2	316022.34	2237617.57	–
CONTROL POINT COORDINATES			
TMB–EA #2	315848.78	2238131.10	820.13
TMB–EA #6	315199.12	2237504.87	833.68
TMB–EA #7	315817.21	2236948.04	845.30
TMB–EA #8	315151.84	2236900.70	838.82

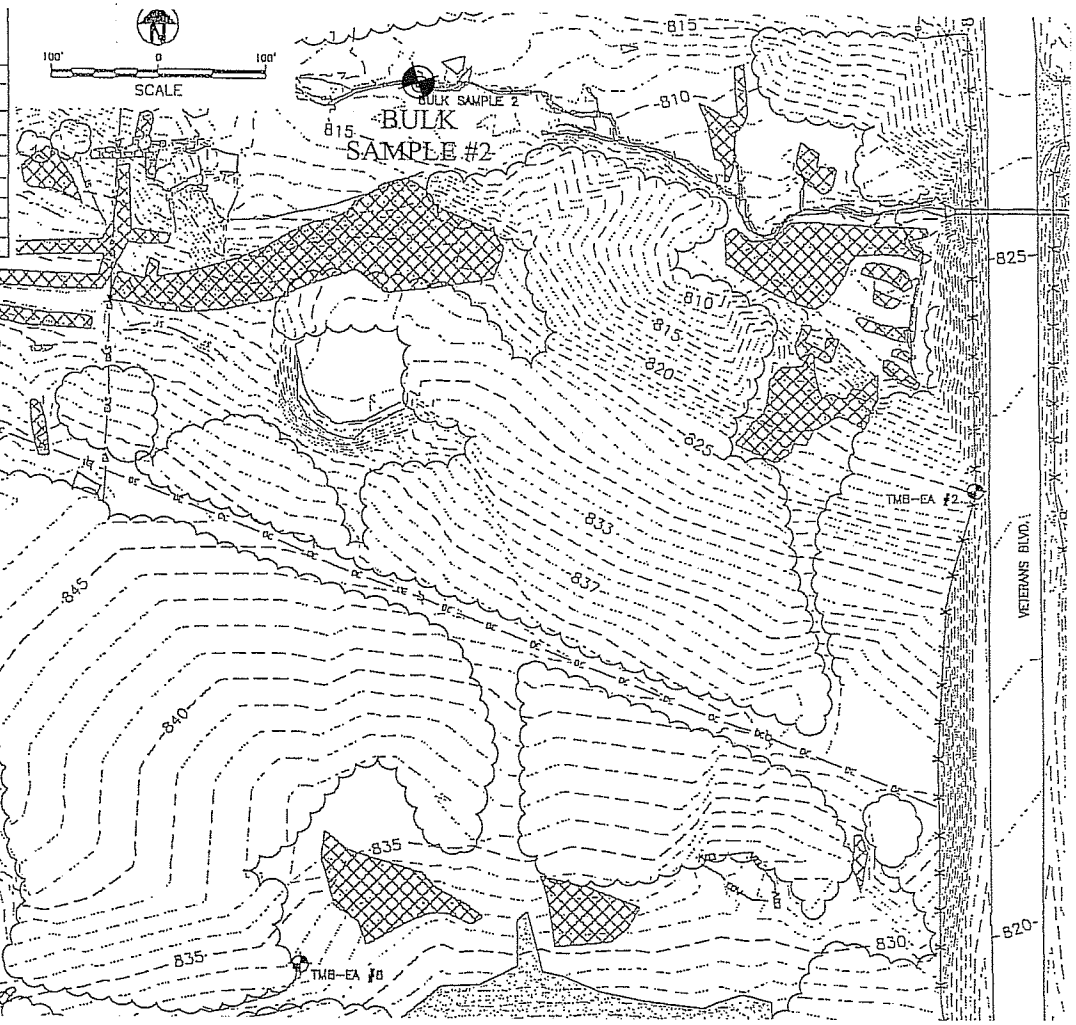

N.T.S.

PROJECT NAME

Subsurface Exploration and Analysis

EA Imperial Refining

Ardmore, Oklahoma

BULK SAMPLE LOCATION PLAN

PROJECT NO.

D101212

DATE

October 5, 2010

Integrated Testing and Engineering Company

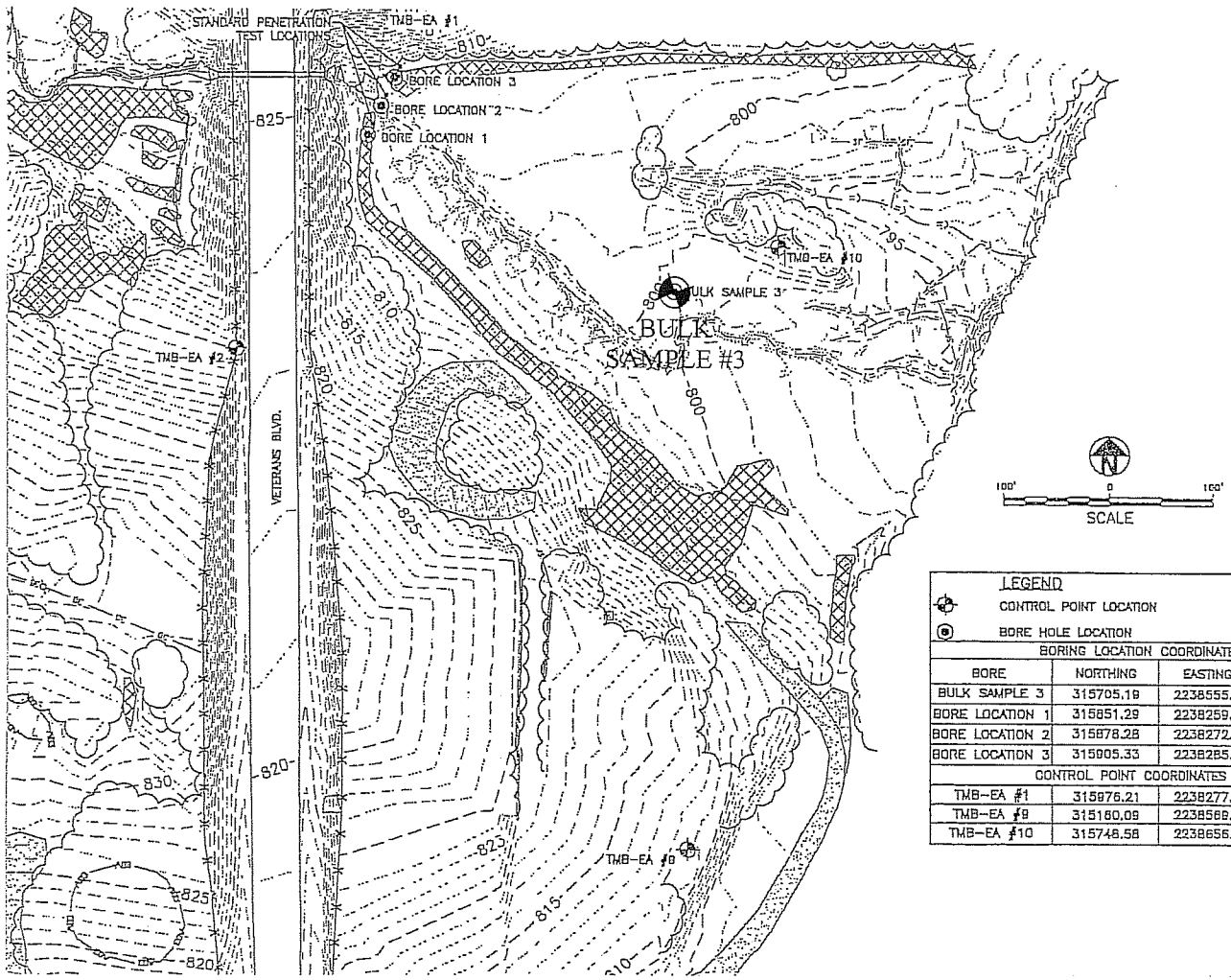

LEGEND

CONTROL POINT LOCATION

BORE HOLE LOCATION

BORING LOCATION COORDINATES			
BORE	NORTHING	EASTING	ELEV.
BULK SAMPLE 3	315705.19	2238555.94	–
BORE LOCATION 1	315851.29	2238259.53	–
BORE LOCATION 2	315878.28	2238272.70	–
BORE LOCATION 3	315905.33	2238285.75	–
CONTROL POINT COORDINATES			
TMB-EA #1	315976.21	2238277.10	822.46
TMB-EA #9	315160.09	2238569.02	811.71
TMB-EA #10	315746.58	2238656.02	803.02

N.T.S.

PROJECT NAME

Subsurface Exploration and Analysis

EA Imperial Refining

Ardmore, Oklahoma

BULK SAMPLE LOCATION PLAN

PROJECT NO.

D101212

DATE

October 5, 2010

LOG OF BORING No. B-1

Project: EA Imperial Refining
Location: Ardmore, Oklahoma

Date Drilled: 10/5/2010
Project No.: D101212

Soil Description	Symbol	Depth	Sample Type	Blows Per Foot	S.S by P.P (TSF)	Moisture Content	Liquid Limit	Plastic Limit	Plasticity Index	Unconfined Compression (TSF)
Dense Reddish Tan and Brown Clayey Sand to Sandy Lean Clay (SC to CL)										
---with Gray Seams and Layers			ST		2.00					
			ST		2.00					
		5								
			ST		1.75					
			ST		1.50					
		10 feet	ST		2.00					
Hard Gray Lean Clay (CL)										
			ST		4.50					1.1
		15								
		20 feet								
		25								
		30 feet								
		35								
		40 feet								

Completion Depth: 12.5-ft
Ground Water Observed: 12-ft
Plate No: 2

S.S by P.P=Shear Strength in TSF by Pocket Penetrometer
SS= Split Spoon Sample
AU=Auger Sample
ST=Shelby Tube Sampling
THD=Texas Cone Penetrometer

Integrated Testing and Engineering Company

LOG OF BORING No. B-1A

Project: EA Imperial Refining
Location: Ardmore, Oklahoma

Date Drilled: 10/5/2010
Project No.: D101212

Soil Description	Symbol	Depth	Sample Type	Blows Per Foot	S.S by P.P (TSF)	Moisture Content	Liquid Limit	Plastic Limit	Plasticity Index	Unconfined Compression (TSF)
Loose Reddish Tan and Brown Clayey Sand (SC)			SS	8						
		5								
		10 feet								
		15								
		20 feet								
		25								
		30 feet								
		35								
		40 feet								

Completion Depth: 2-ft
Ground Water Observed: No
Plate No: 3

S.S by P.P=Shear Strength in TSF by Pocket Penetrometer
SS= Split Spoon Sample
AU=Auger Sample
ST=Shelby Tube Sampling
THD=Texas Cone Penetrometer

Integrated Testing and Engineering Company

LOG OF BORING No. B-2

Project: EA Imperial Refining
Location: Ardmore, Oklahoma

Date Drilled: 10/5/2010
Project No.: D101212

Soil Description	Symbol	Depth	Sample Type	Blows Per Foot	S.S by P.P (TSF)	Moisture Content	Liquid Limit	Plastic Limit	Plasticity Index	Unconfined Compression (TSF)
Dense Reddish Tan and Brown Clayey Sand (SC)										
---with Gray Seams and Layers			ST		1.25					
Stiff to Very Stiff Brown Sandy Lean Clay to Lean Clay			ST		1.50					
(CL)		5								
---with Gray Seams and Layers			ST		2.50					0.9
			ST		2.00					
Stiff Gray Lean Clay (CL)										
		10 feet	ST		1.00					
		15								
		20 feet								
		25								
		30 feet								
		35								
		40 feet								

Completion Depth: 10-ft | Ground Water Observed: No | Plate No: 4

S.S by P.P=Shear Strength in TSF by Pocket Penetrometer
SS= Split Spoon Sample
AU=Auger Sample
ST=Shelby Tube Sampling
THD=Texas Cone Penetrometer

Integrated Testing and Engineering Company

LOG OF BORING No. B-2A

Project: EA Imperial Refining
Location: Ardmore, Oklahoma

Date Drilled: 10/5/2010
Project No.: D101212

Soil Description	Symbol	Depth	Sample Type	Blows Per Foot	S.S by P.P (TSF)	Moisture Content	Liquid Limit	Plastic Limit	Plasticity Index	Unconfined Compression (TSF)
Medium Dense Reddish Tan and Brown Clayey Sand (SC)			SS	22						
		5								
		10 feet								
		15								
		20 feet								
		25								
		30 feet								
		35								
		40 feet								

Completion Depth: 2-ft
Ground Water Observed: No
Plate No: 5

S.S by P.P=Shear Strength in TSF by Pocket Penetrometer
SS= Split Spoon Sample
AU=Auger Sample
ST=Shelby Tube Sampling
THD=Texas Cone Penetrometer

Integrated Testing and Engineering Company

LOG OF BORING No. B-3

Project: EA Imperial Refining
Location: Ardmore, Oklahoma

Date Drilled: 10/5/2010
Project No.: D101212

Soil Description	Symbol	Depth	Sample Type	Blows Per Foot	S.S by P.P (TSF)	Moisture Content	Liquid Limit	Plastic Limit	Plasticity Index	Unconfined Compression (TSF)
Medium Dense Reddish Tan and Brown Clayey Sand to Sandy Lean Clay (SC to CL)			ST		4.50					
			ST		3.00					
		5								
			ST		0.75					
Stiff Brown to Gray Sandy Lean Clay to Lean Clay (CL)			ST		2.00					
		10 feet	ST		2.00					
		15								
		20 feet								
		25								
		30 feet								
		35								
		40 feet								

Completion Depth: 10-ft

Ground Water Observed: No

Plate No: 6

S.S by P.P=Shear Strength in TSF by Pocket Penetrometer

SS= Split Spoon Sample
AU=Auger Sample

ST=Shelby Tube Sampling
THD=Texas Cone Penetrometer

Integrated Testing and Engineering Company

LOG OF BORING No. B-3A

Project: EA Imperial Refining
Location: Ardmore, Oklahoma

Date Drilled: 10/5/2010
Project No.: D101212

Soil Description	Symbol	Depth	Sample Type	Blows Per Foot	S.S by P.P (TSF)	Moisture Content	Liquid Limit	Plastic Limit	Plasticity Index	Unconfined Compression (TSF)
Loose Reddish Tan and Brown Clayey Sand (SC)			SS	5						
		5								
		10 feet								
		15								
		20 feet								
		25								
		30 feet								
		35								
		40 feet								

Completion Depth: 2-ft
Ground Water Observed: No
Plate No: 7

S.S by P.P=Shear Strength in TSF by Pocket Penetrometer
SS= Split Spoon Sample
AU=Auger Sample
ST=Shelby Tube Sampling
THD=Texas Cone Penetrometer

Integrated Testing and Engineering Company

KEY TO CLASSIFICATIONS AND SYMBOLS

Soil Fractions

Component	Size Range
Boulders	Greater than 12"
Cobbles	3" - 12"
Gravel	3" - #4 (4.75mm)
Coarse	3" – ¾"
Fine	¾" - #4
Sand	#4 - #200 (0.074mm)
Coarse	#4 - #10 (2.00mm)
Medium	#10 - #40 (0.042mm)
Coarse	#40 - #200 (0.074mm)
Silt and Clay	Less than #200

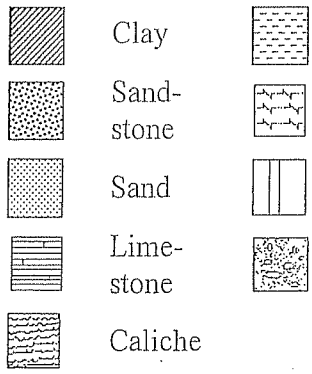

TERMS DESCRIBING SOIL CONSISTENCY

Description: Cohesive Soils	Unconfined Compression (TSF)	Blows/Foot Std. Pen. Test.	Description: Cohesionless Soils	Blows/Foot Std. Pen. Test.
Very Soft	0.25	< 2	Very Loose	0 – 4
Soft	0.25 – 0.50	2 – 4	Loose	4 – 10
Firm	0.50 – 1.00	4 – 8	Medium Dense	10 – 30
Stiff	1.00 – 2.00	8 – 15	Dense	30 – 50
Very Stiff	2.00 – 4.00	15 – 30	Very Dense	50
Hard	> 4.00	> 30		

SOIL STRUCTURE

Calcareous	Containing deposits of Calcium Carbonate; generally modular
Slickensided	Having inclined planes of weakness that are slick and glossy in appearance.
Laminated	Composed of thin layers of varying colours and textures
Fissured	Containing shrinkage cracks frequently filled with fine sand or silt. Usually more or less vertical
Interbedded	Composed of alternate layers of different soil types
Jointed	Consisting of hair cracks that fall apart as soon as the confining pressure is removed
Varved	Consisting of alternate thin layers of sand, silt or clay formed by variations in sedimentation during the various seasons of the year. Each layer is generally less than ½ inch in thickness.
Stratified	Composed of, or arranged in layers (usually 1 inch or more)
Well-graded	Having a wide range of grain sizes and substantial amounts of all intermediate particle sizes.
Poorly or Gap-graded	Having a range of sizes with some intermediate sizes missing.
Uniformly Graded	Predominantly of one grain size.

InTEC

LABORATORY COMPACTION RESULTS

TESTED FOR: EA Engineering Science
& Technology, Inc.
405 S. Hwy. 121 Bypass, Suite C-100
Lewisville, TX 75067

PROJECT: EA Imperial Refining
Ardmore, OK

InTEC PROJECT #: D102026 / D101212

TEST DATA

SOIL I.D.: Bulk Sample #1

SOIL TYPE: Brown Sandy Lean Clay (CL)

TEST METHOD: ASTM D698

TEST DATE: 10/2/2010

MAXIMUM DRY DENSITY: 124.8 PCF

OPTIMUM WATER CONTENT: 8.9%

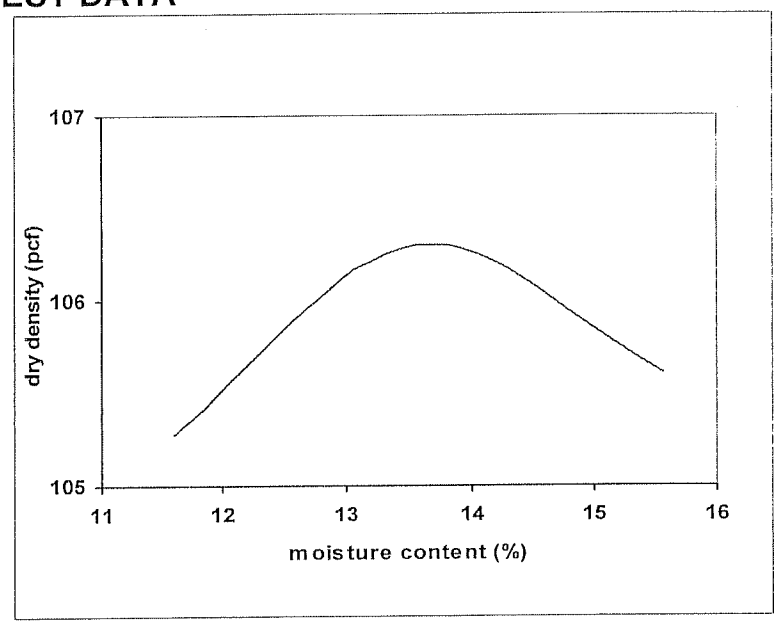

LIQUID LIMIT: 43

PLASTICITY INDEX: 25

Respectfully Submitted,

Shawn Wilson, PE
Regional Vice President

INTEGRATED TESTING AND ENGINEERING COMPANY OF DFW METRO, INC.
350 E. Glade Road Euless, Texas 76039-4105 PH: (817)858-0870 FX: (817)858-0036

InTEC

LABORATORY COMPACTION RESULTS

TESTED FOR: EA Engineering Science
& Technology, Inc.
405 S. Hwy. 121 Bypass, Suite C-100
Lewisville, TX 75067

PROJECT: EA Imperial Refining
Ardmore, OK

InTEC PROJECT #: D102026 / D101212

TEST DATA

SOIL I.D.: Bulk Sample #2

SOIL TYPE: Light Brown Clayey Sand (SC)

TEST METHOD: ASTM D698

TEST DATE: 10/2/2010

MAXIMUM DRY DENSITY: 115.9 PCF

OPTIMUM WATER CONTENT: 11.2%

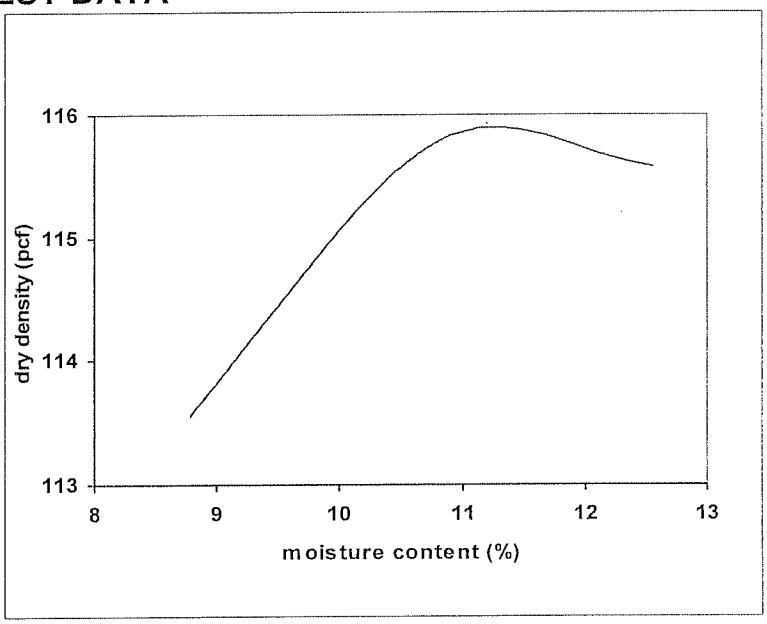

Respectfully Submitted,

LIQUID LIMIT: 30

PLASTICITY INDEX: 15

Shawn Wilson, PE
Regional Vice President

INTEGRATED TESTING AND ENGINEERING COMPANY OF DFW METRO, INC.
350 E. Glade Road Euless, Texas 76039-4105 PH: (817)858-0870 FX: (817)858-0036

InTEC

LABORATORY COMPACTION RESULTS

TESTED FOR: EA Engineering Science
& Technology, Inc.
405 S. Hwy. 121 Bypass, Suite C-100
Lewisville, TX 75067

PROJECT: EA Imperial Refining
Ardmore, OK

InTEC PROJECT #: D102026 / D101212

TEST DATA

SOIL I.D.: Bulk Sample #3

SOIL TYPE: Tan Clayey Sand (SC)

TEST METHOD: ASTM D698

TEST DATE: 10/2/2010

MAXIMUM DRY DENSITY: 115.9PCF

OPTIMUM WATER CONTENT: 12.4%

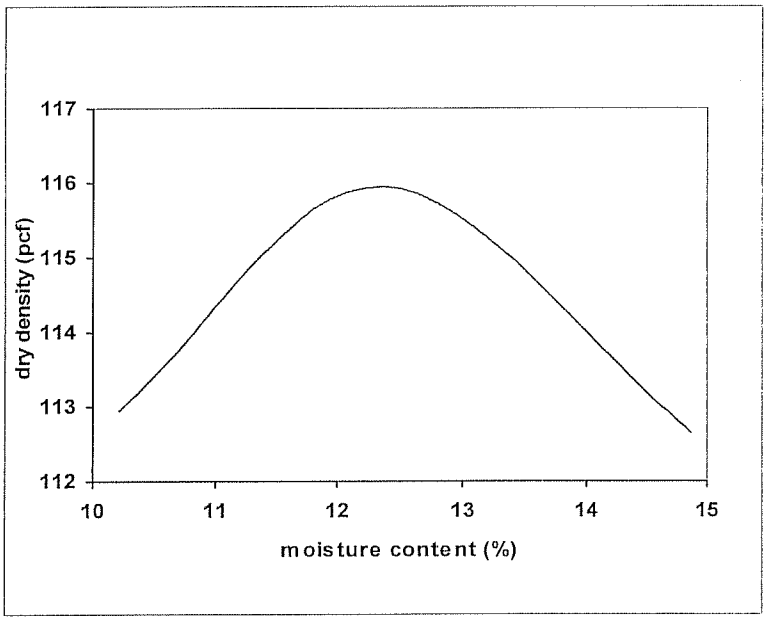

Respectfully Submitted,

LIQUID LIMIT: 30

PLASTICITY INDEX: 15

Shawn Wilson, PE
Regional Vice President

INTEGRATED TESTING AND ENGINEERING COMPANY OF DFW METRO, INC.
350 E. Glade Road Euless, Texas 76039-4105 PH: (817)858-0870 FX: (817)858-0036

GRAIN SIZE ANALYSIS

Project:	EA Imperial Refining	**Date Retrieved:**	10/2/2010
Soil ID:	Bulk Sample #1 - Brown Sandy Lean Clay (CL)	**Project Number:**	D101212
Location:	Ardmore, Oklahoma		

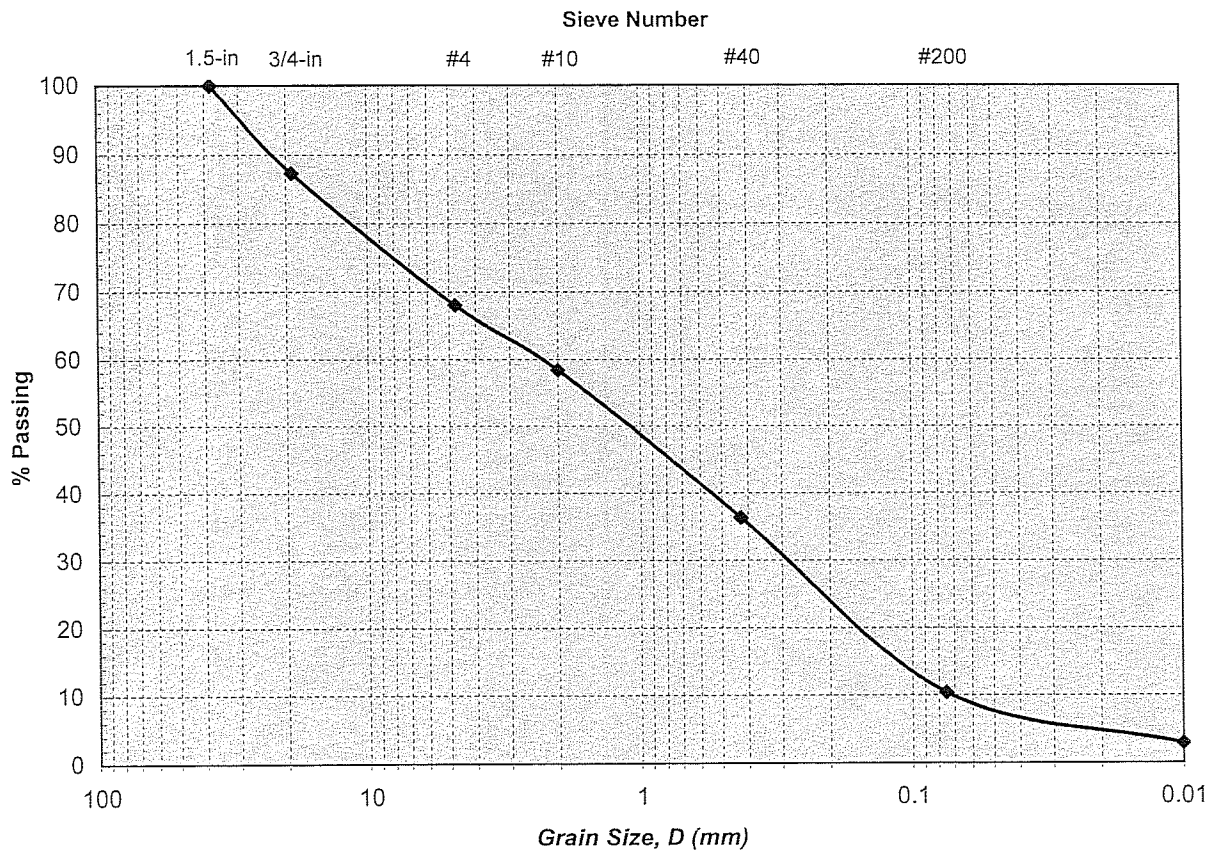

PLATE 1

Integrated Testing and Engineering Company

GRAIN SIZE ANALYSIS

Project:	EA Imperial Refining	**Date Retrieved:**	10/2/2010
Soil ID:	Bulk Sample #2 - Light Brown Clayey Sand (SC)	**Project Number:**	D101212
Location:	Ardmore, Oklahoma		

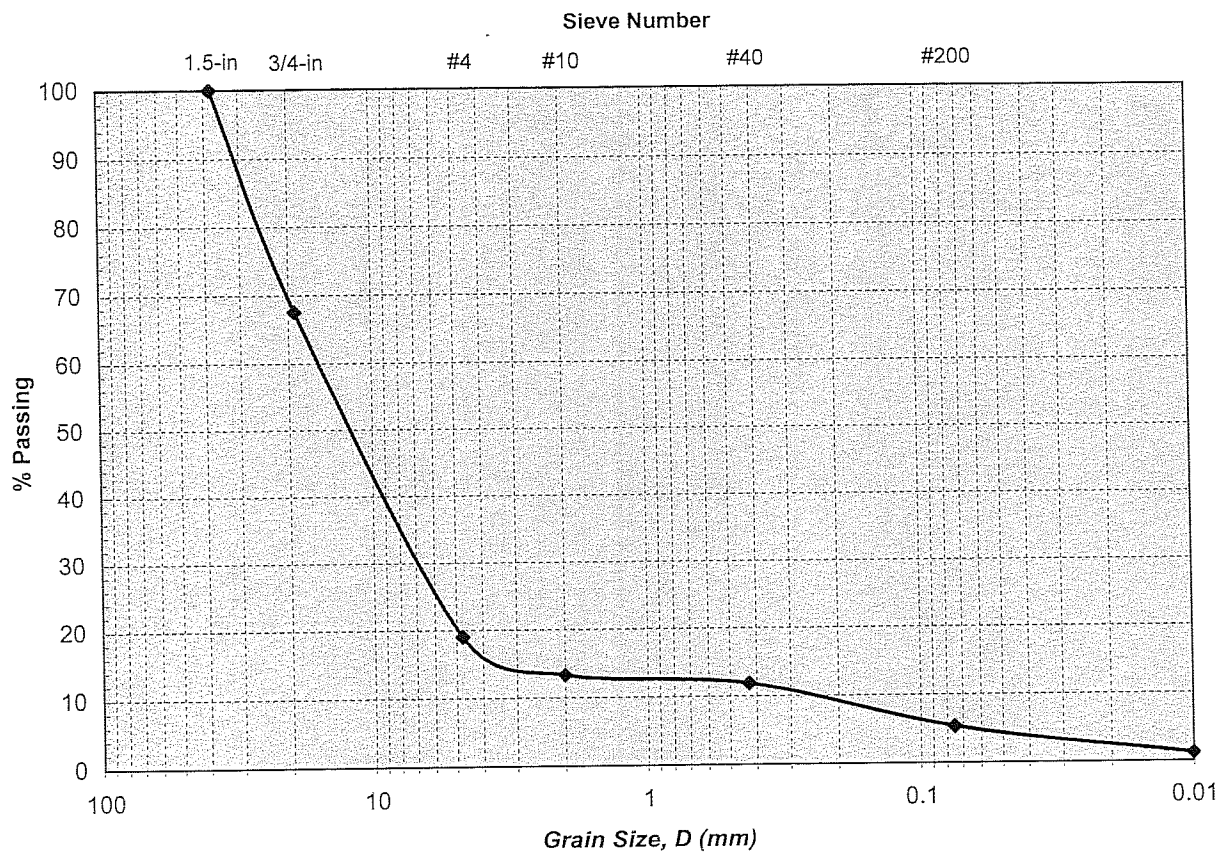

PLATE 1

Integrated Testing and Engineering Company

GRAIN SIZE ANALYSIS

Project:	EA Imperial Refining	**Date Retrieved:**	10/2/2010
Soil ID:	Bulk Sample #3 - Tan Clayey Sand (SC)	**Project Number:**	D101212
Location:	Ardmore, Oklahoma		

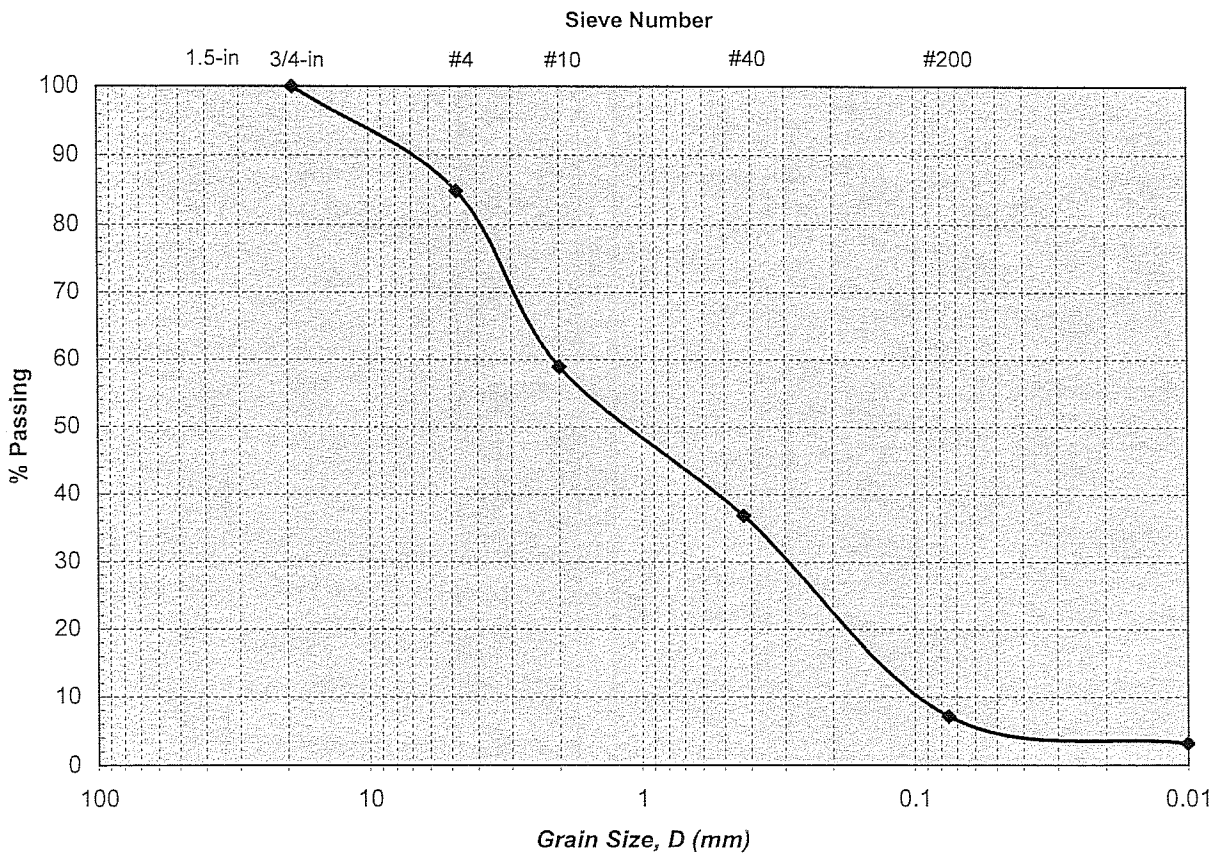

PLATE 1

Integrated Testing and Engineering Company

Appendix E

HydroCAD Summary

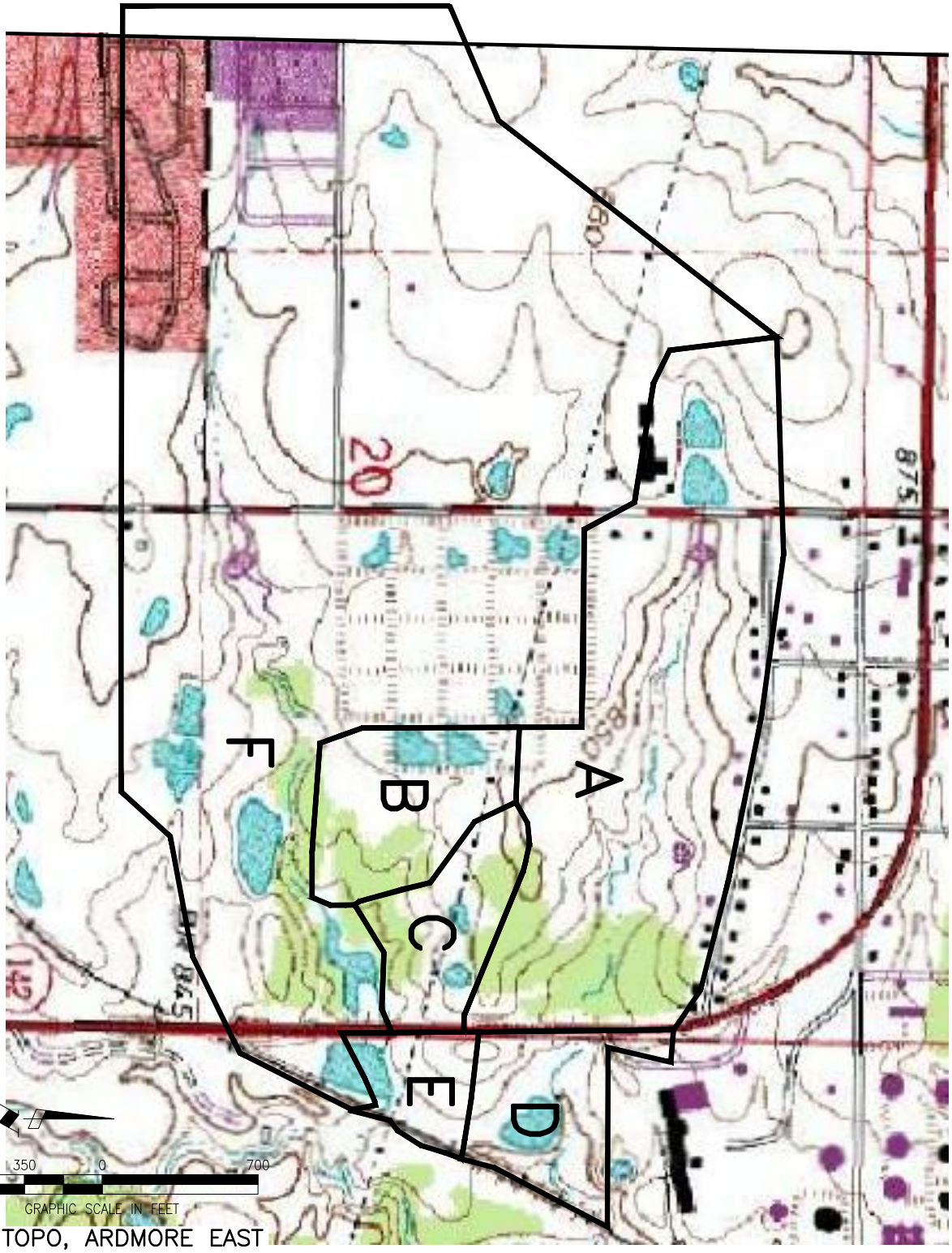

USGS TOPO, ARDMORE EAST

EA ENGINEERING, SCIENCE, AND TECHNOLOGY

IMPERIAL REFINING SUPERFUND SITE
ARDMORE, OKLAHOMA

DRAINAGE AREAS

PROJECT MGR	DESIGNED BY	DRAWN BY	CHECKED BY	SCALE	DATE	PROJECT NO	FIGURE
BY	–	LLR	JMT	AS SHOWN	AUGUST 2011	14342.39	1

DRAWING NAME: F:\Federal\Non Dod\EPA\projects\1434239\Figures\Design\Hydrology.dwg
DATE:08/03/2011 TIME:11:19 DRAWN BY: Irief

Subcat Reach Pond Link

Drainage Diagram for Imperial Refining

Prepared by EA Engineering, Printed 8/3/2011

HydroCAD® 8.50 s/n 005680 © 2007 HydroCAD Software Solutions LLC

Summary for Subcatchment 1S: A

Runoff = 234.85 cfs @ 12.43 hrs, Volume= 30.944 af, Depth= 6.17"

Runoff by SCS TR-20 method, UH=SCS, Time Span= 5.00-40.00 hrs, dt= 0.01 hrs
Type II 24-hr 100-yr Rainfall=9.10"

Area (ac)	CN	Description
60.200	76	Woods/grass comb., Fair, HSG C
60.200		Pervious Area

Tc (min)	Length (feet)	Slope (ft/ft)	Velocity (ft/sec)	Capacity (cfs)	Description
17.7	300	0.0333	0.28		**Sheet Flow,** Grass: Short n= 0.150 P2= 3.80"
29.9	3,026	0.0284	1.69		**Shallow Concentrated Flow,** Nearly Bare & Untilled Kv= 10.0 fps
47.6	3,326	Total			

Subcatchment 1S: A

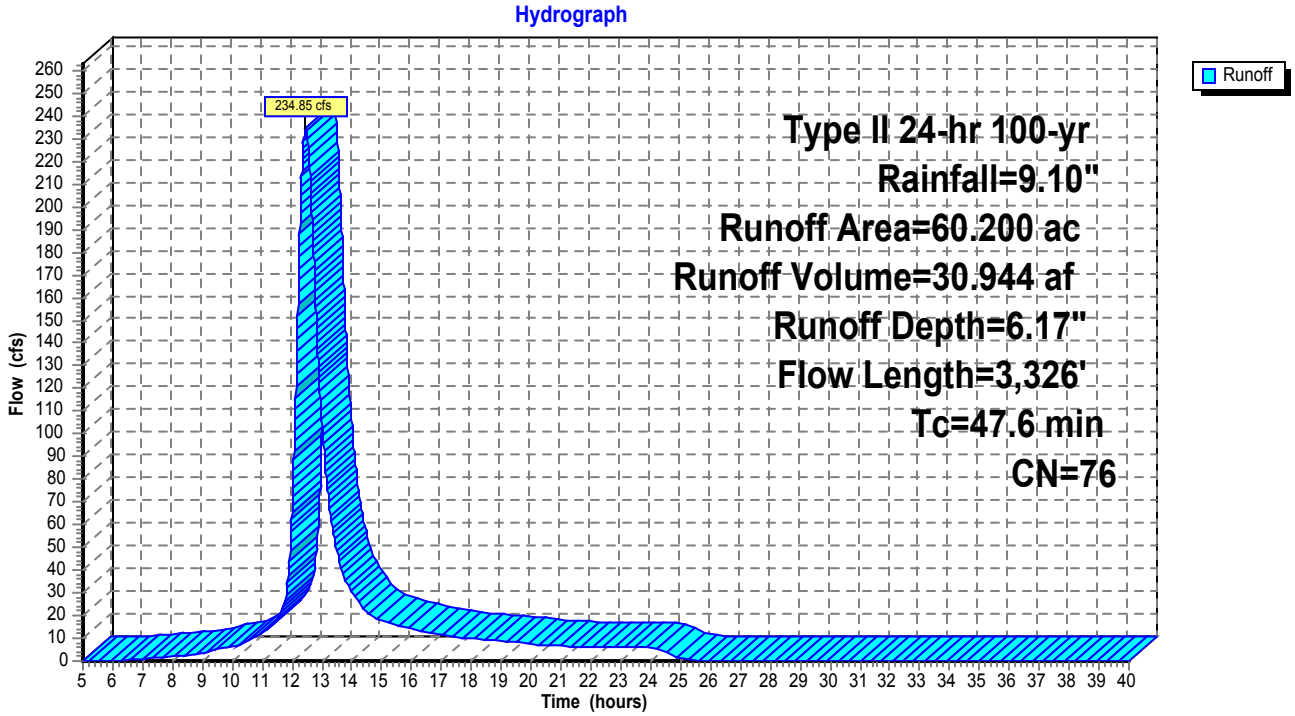

Summary for Subcatchment 2S: B

Runoff = 53.05 cfs @ 12.44 hrs, Volume= 6.734 af, Depth= 6.17"

Runoff by SCS TR-20 method, UH=SCS, Time Span= 5.00-40.00 hrs, dt= 0.01 hrs
Type II 24-hr 100-yr Rainfall=9.10"

Area (ac)	CN	Description
13.100	76	Woods/grass comb., Fair, HSG C
13.100		Pervious Area

Tc (min)	Length (feet)	Slope (ft/ft)	Velocity (ft/sec)	Capacity (cfs)	Description
37.1	300	0.0133	0.13		**Sheet Flow,** Grass: Dense n= 0.240 P2= 3.80"
7.9	949	0.0400	2.00		**Shallow Concentrated Flow,** Nearly Bare & Untilled Kv= 10.0 fps
45.0	1,249	Total			

Subcatchment 2S: B

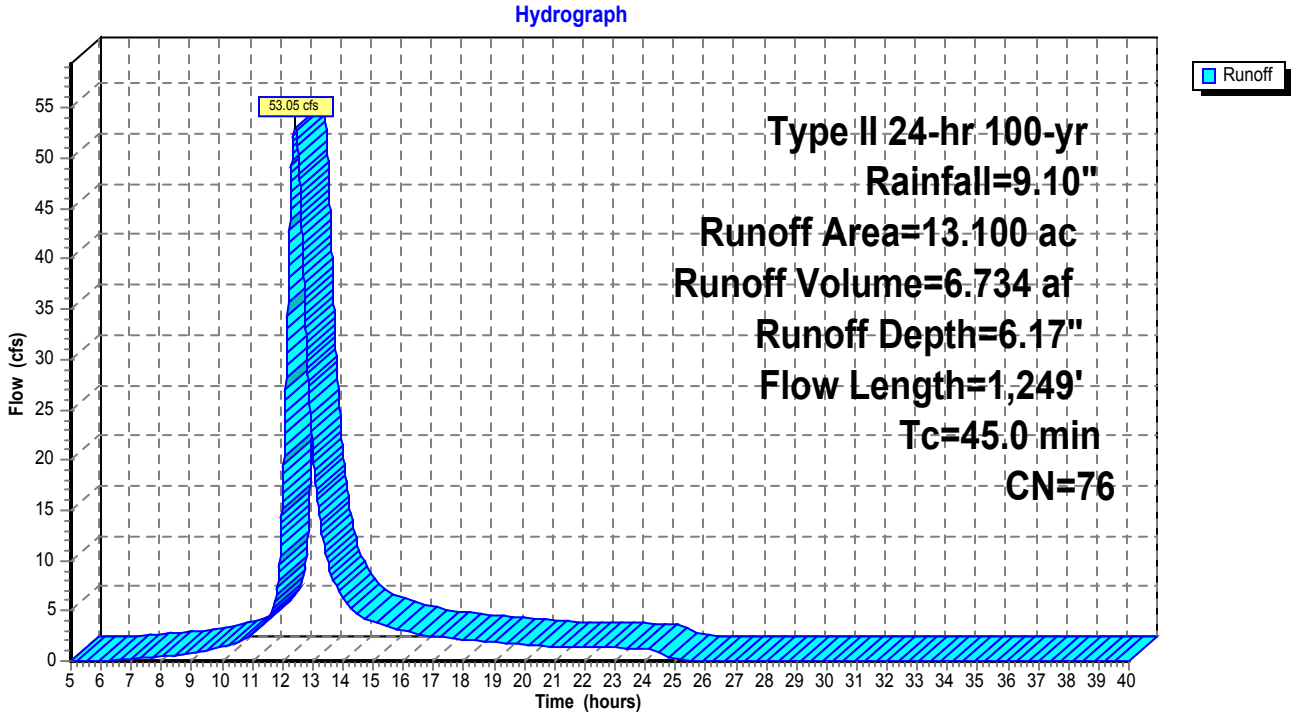

Summary for Subcatchment 3S: C

Runoff = 47.80 cfs @ 12.27 hrs, Volume= 5.037 af, Depth= 6.17"

Runoff by SCS TR-20 method, UH=SCS, Time Span= 5.00-40.00 hrs, dt= 0.01 hrs
Type II 24-hr 100-yr Rainfall=9.10"

Area (ac)	CN	Description
9.800	76	Woods/grass comb., Fair, HSG C
9.800		Pervious Area

Tc (min)	Length (feet)	Slope (ft/ft)	Velocity (ft/sec)	Capacity (cfs)	Description
28.6	300	0.0100	0.18		**Sheet Flow,** Grass: Short n= 0.150 P2= 3.80"
5.8	714	0.0420	2.05		**Shallow Concentrated Flow,** Nearly Bare & Untilled Kv= 10.0 fps
34.4	1,014	Total			

Subcatchment 3S: C

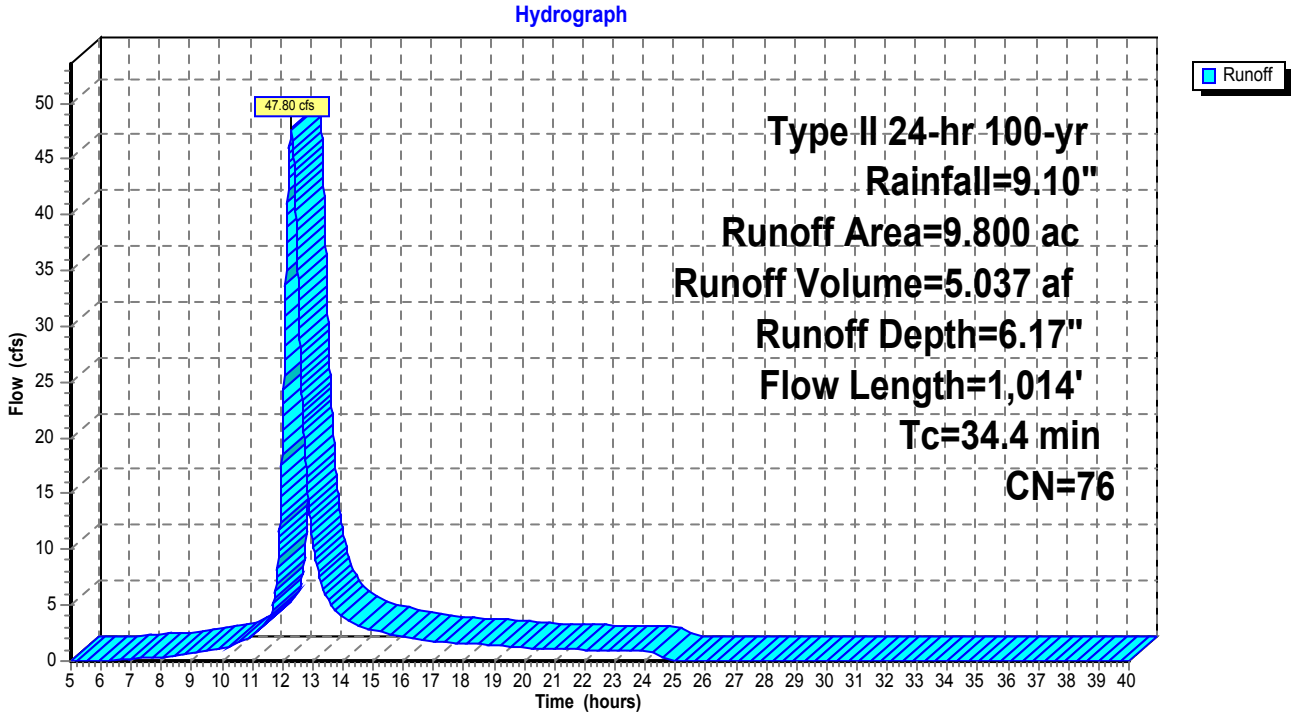

Summary for Subcatchment 4S: D

Runoff = 60.79 cfs @ 12.21 hrs, Volume= 5.603 af, Depth= 6.17"

Runoff by SCS TR-20 method, UH=SCS, Time Span= 5.00-40.00 hrs, dt= 0.01 hrs
Type II 24-hr 100-yr Rainfall=9.10"

Area (ac)	CN	Description
10.900	76	Woods/grass comb., Fair, HSG C
10.900		Pervious Area

Tc (min)	Length (feet)	Slope (ft/ft)	Velocity (ft/sec)	Capacity (cfs)	Description
13.1	300	0.0700	0.38		**Sheet Flow,** Grass: Short n= 0.150 P2= 3.80"
14.8	1,080	0.0148	1.22		**Shallow Concentrated Flow,** Nearly Bare & Untilled Kv= 10.0 fps
27.9	1,380	Total			

Subcatchment 4S: D

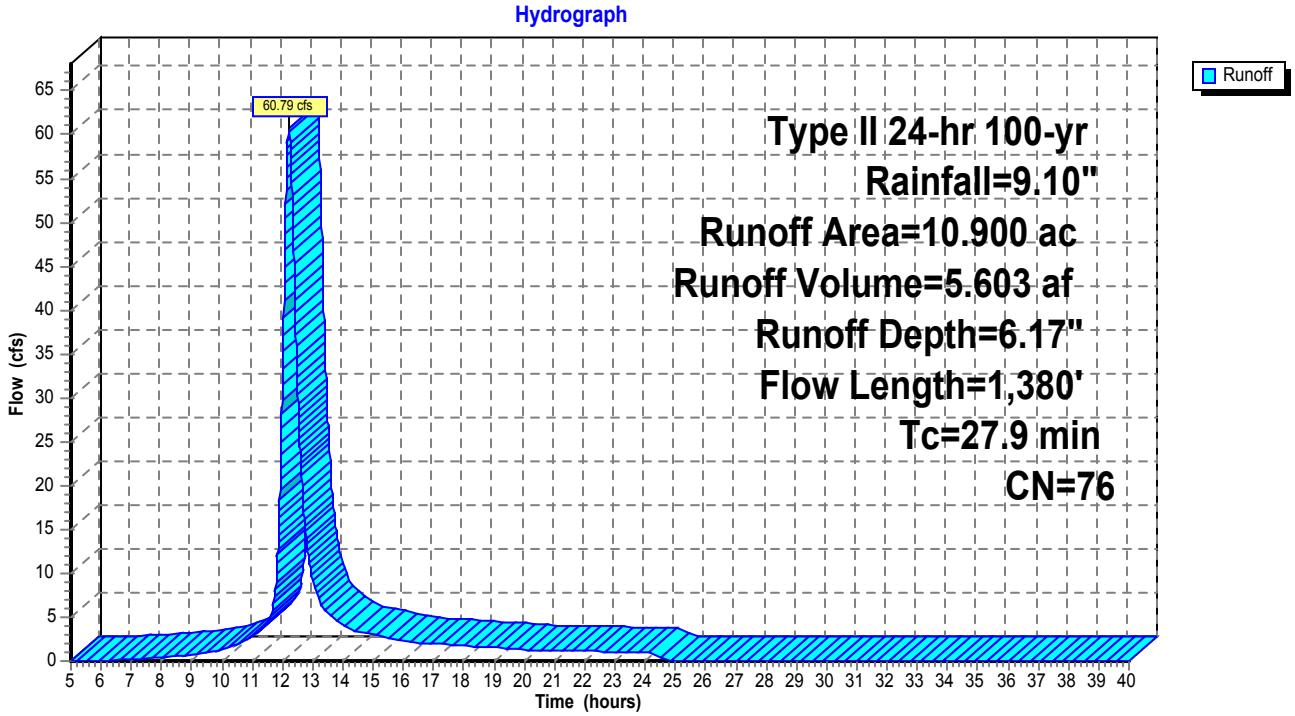

Summary for Subcatchment 5S: E

Runoff = 36.18 cfs @ 12.14 hrs, Volume= 2.827 af, Depth= 6.17"

Runoff by SCS TR-20 method, UH=SCS, Time Span= 5.00-40.00 hrs, dt= 0.01 hrs
Type II 24-hr 100-yr Rainfall=9.10"

Area (ac)	CN	Description
5.500	76	Woods/grass comb., Fair, HSG C
5.500		Pervious Area

Tc (min)	Length (feet)	Slope (ft/ft)	Velocity (ft/sec)	Capacity (cfs)	Description
15.0	300	0.0500	0.33		**Sheet Flow,** Grass: Short n= 0.150 P2= 3.80"
6.3	463	0.0151	1.23		**Shallow Concentrated Flow,** Nearly Bare & Untilled Kv= 10.0 fps
21.3	763	Total			

Subcatchment 5S: E

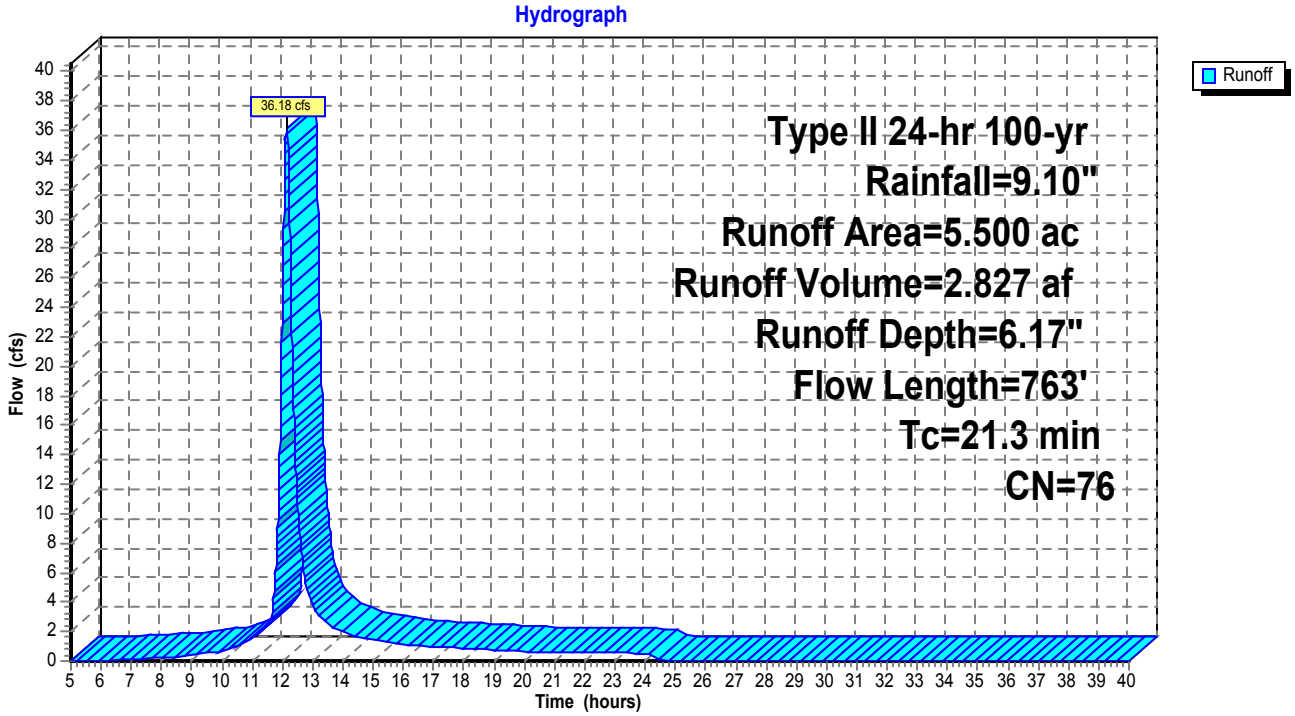

Summary for Subcatchment 6S: F

Runoff = 294.53 cfs @ 13.98 hrs, Volume= 94.241 af, Depth= 6.04"

Runoff by SCS TR-20 method, UH=SCS, Time Span= 5.00-40.00 hrs, dt= 0.01 hrs
Type II 24-hr 100-yr Rainfall=9.10"

	Area (ac)	CN	Description
*	187.100	75	Woods/grass comb., Fair, HSG C
	187.100		Pervious Area

Tc (min)	Length (feet)	Slope (ft/ft)	Velocity (ft/sec)	Capacity (cfs)	Description
25.7	300	0.0333	0.19		**Sheet Flow,** Grass: Dense n= 0.240 P2= 3.80"
129.7	4,968	0.0163	0.64		**Shallow Concentrated Flow,** Woodland Kv= 5.0 fps
155.4	5,268	Total			

Subcatchment 6S: F

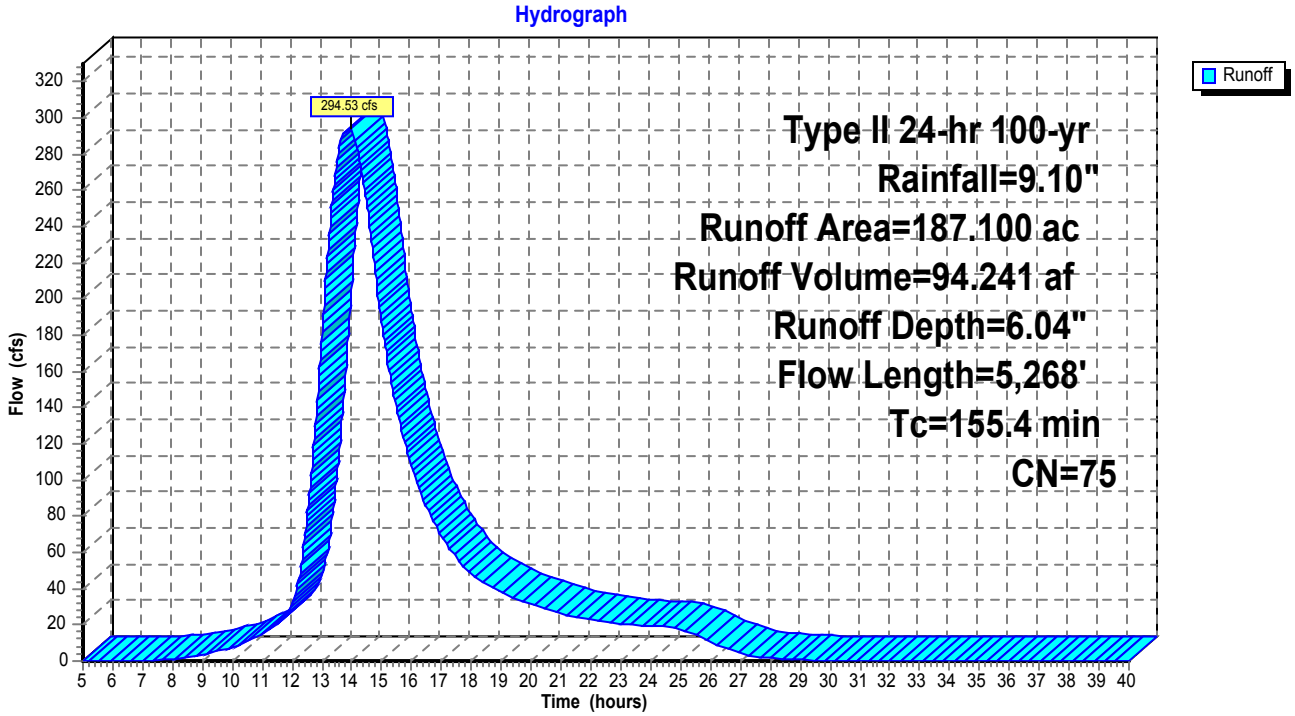

Summary for Subcatchment 7S: B - Contributing to Check Dams

Runoff = 27.13 cfs @ 12.44 hrs, Volume= 3.444 af, Depth= 6.17"

Runoff by SCS TR-20 method, UH=SCS, Time Span= 5.00-40.00 hrs, dt= 0.01 hrs
Type II 24-hr 100-yr Rainfall=9.10"

Area (ac)	CN	Description
6.700	76	Woods/grass comb., Fair, HSG C
6.700		Pervious Area

Tc (min)	Length (feet)	Slope (ft/ft)	Velocity (ft/sec)	Capacity (cfs)	Description
37.1	300	0.0133	0.13		**Sheet Flow,** Grass: Dense n= 0.240 P2= 3.80"
7.9	949	0.0400	2.00		**Shallow Concentrated Flow,** Nearly Bare & Untilled Kv= 10.0 fps
45.0	1,249	Total			

Subcatchment 7S: B - Contributing to Check Dams

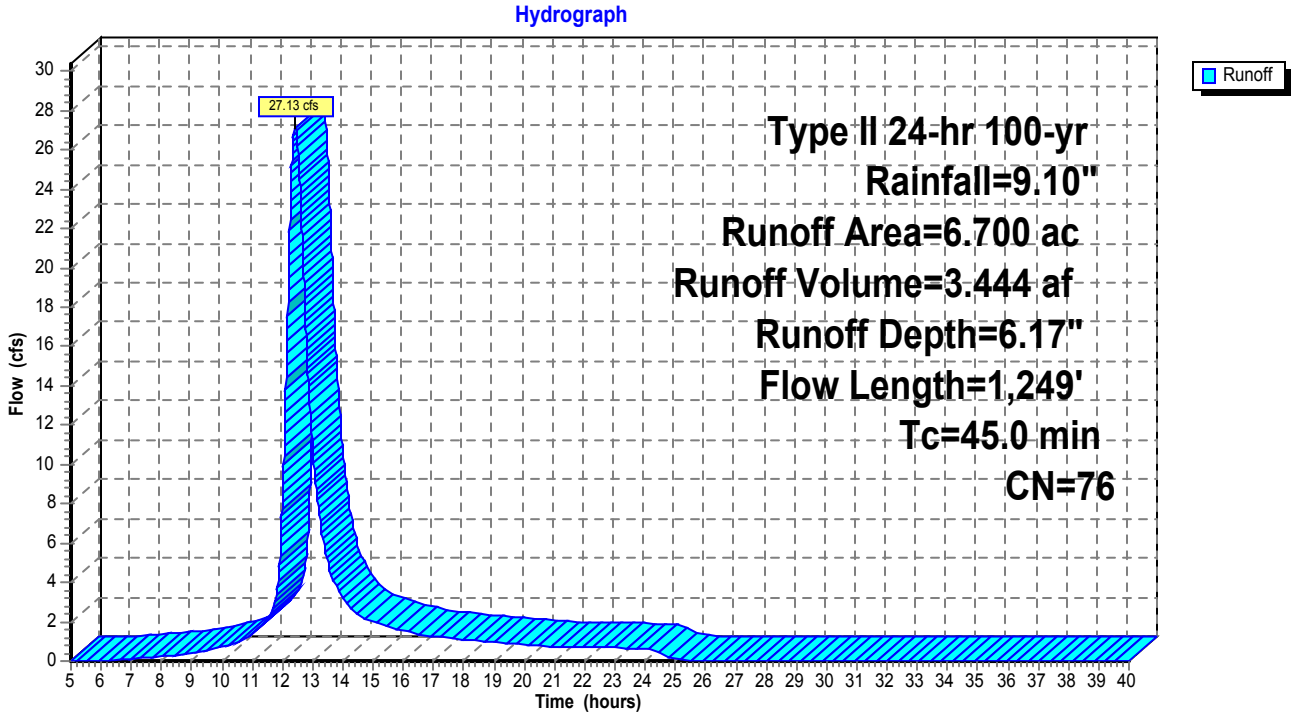

Summary for Subcatchment 8S: Highway Ditch

Runoff = 4.19 cfs @ 12.16 hrs, Volume= 0.345 af, Depth= 5.92"

Runoff by SCS TR-20 method, UH=SCS, Time Span= 5.00-40.00 hrs, dt= 0.01 hrs
Type II 24-hr 100-yr Rainfall=9.10"

Area (ac)	CN	Description
0.700	74	>75% Grass cover, Good, HSG C
0.700		Pervious Area

Tc (min)	Length (feet)	Slope (ft/ft)	Velocity (ft/sec)	Capacity (cfs)	Description
23.3	300	0.0167	0.21		**Sheet Flow,** Grass: Short n= 0.150 P2= 3.80"

Subcatchment 8S: Highway Ditch

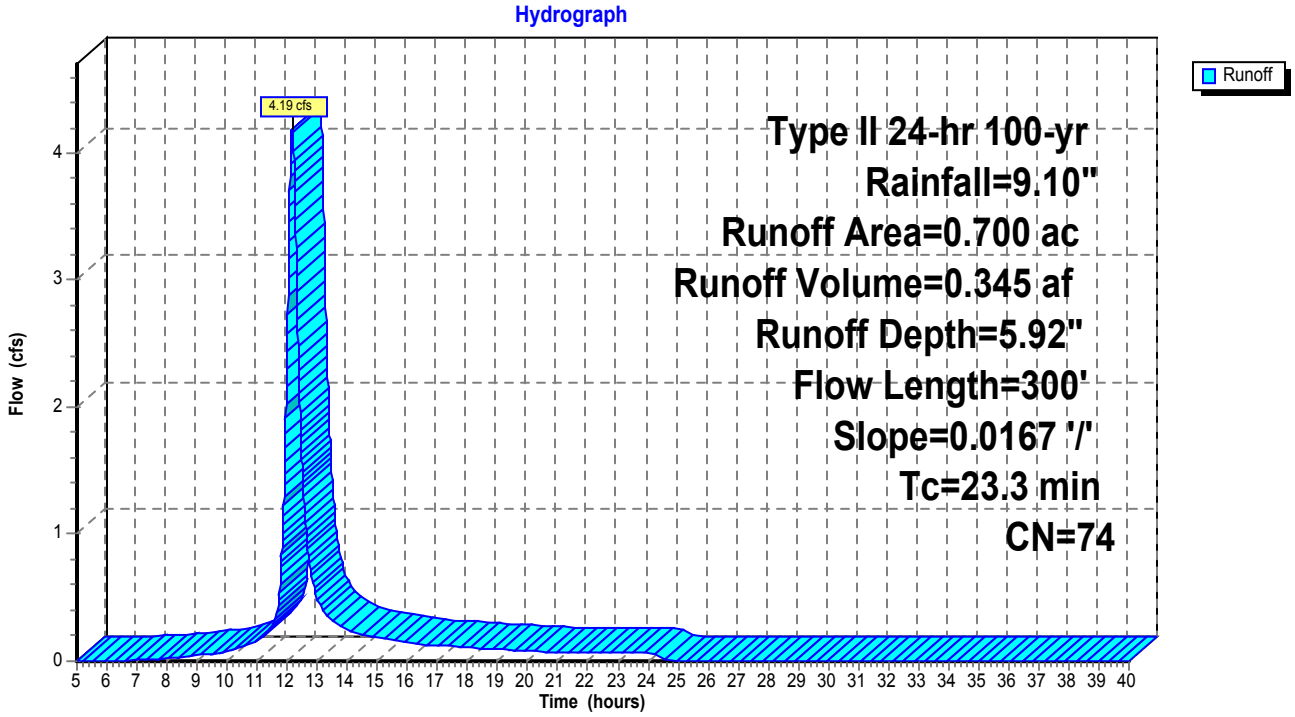

Summary for Reach 1R: Channel 1

Inflow Area = 6.700 ac, 0.00% Impervious, Inflow Depth = 6.17" for 100-yr event
Inflow = 27.13 cfs @ 12.44 hrs, Volume= 3.444 af
Outflow = 27.12 cfs @ 12.46 hrs, Volume= 3.444 af, Atten= 0%, Lag= 1.2 min

Routing by Stor-Ind+Trans method, Time Span= 5.00-40.00 hrs, dt= 0.01 hrs
Max. Velocity= 4.76 fps, Min. Travel Time= 0.9 min
Avg. Velocity = 1.40 fps, Avg. Travel Time= 3.2 min

Peak Storage= 1,537 cf @ 12.45 hrs, Average Depth at Peak Storage= 0.41'
Bank-Full Depth= 1.00', Capacity at Bank-Full= 135.70 cfs

12.00' x 1.00' deep channel, n= 0.030
Side Slope Z-value= 5.0 '/' Top Width= 22.00'
Length= 269.8' Slope= 0.0371 '/'
Inlet Invert= 835.00', Outlet Invert= 825.00'

‡

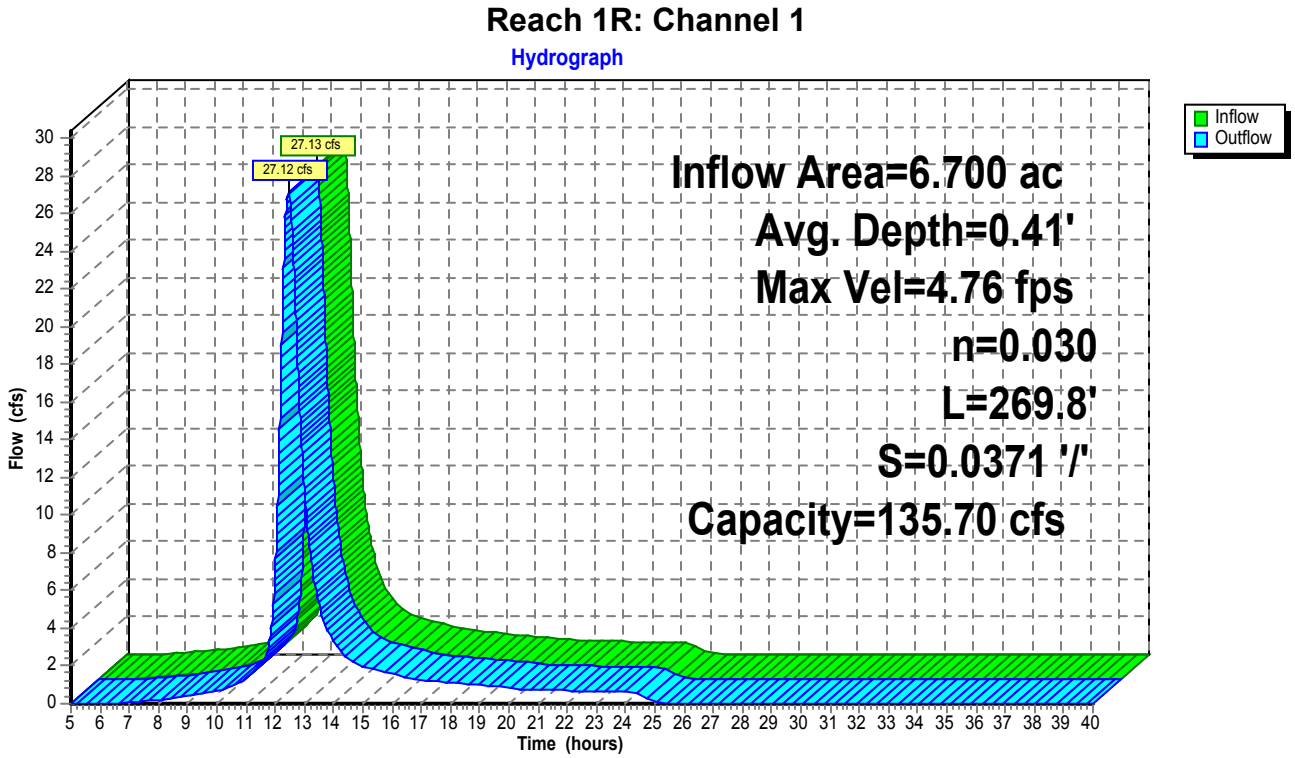

Summary for Reach 2R: Channel 1 - Check Dam Channel

[61] Hint: Exceeded Reach 1R outlet invert by 0.30' @ 12.46 hrs

Inflow Area = 6.700 ac, 0.00% Impervious, Inflow Depth = 6.17" for 100-yr event
Inflow = 27.12 cfs @ 12.46 hrs, Volume= 3.444 af
Outflow = 27.12 cfs @ 12.46 hrs, Volume= 3.444 af, Atten= 0%, Lag= 0.2 min

Routing by Stor-Ind+Trans method, Time Span= 5.00-40.00 hrs, dt= 0.01 hrs
Max. Velocity= 6.59 fps, Min. Travel Time= 0.2 min
Avg. Velocity = 2.03 fps, Avg. Travel Time= 0.7 min

Peak Storage= 329 cf @ 12.46 hrs, Average Depth at Peak Storage= 0.30'
Bank-Full Depth= 2.00', Capacity at Bank-Full= 845.26 cfs

12.00' x 2.00' deep channel, n= 0.030
Side Slope Z-value= 5.0 '/' Top Width= 32.00'
Length= 80.0' Slope= 0.1000 '/'
Inlet Invert= 825.00', Outlet Invert= 817.00'

‡

Reach 2R: Channel 1 - Check Dam Channel

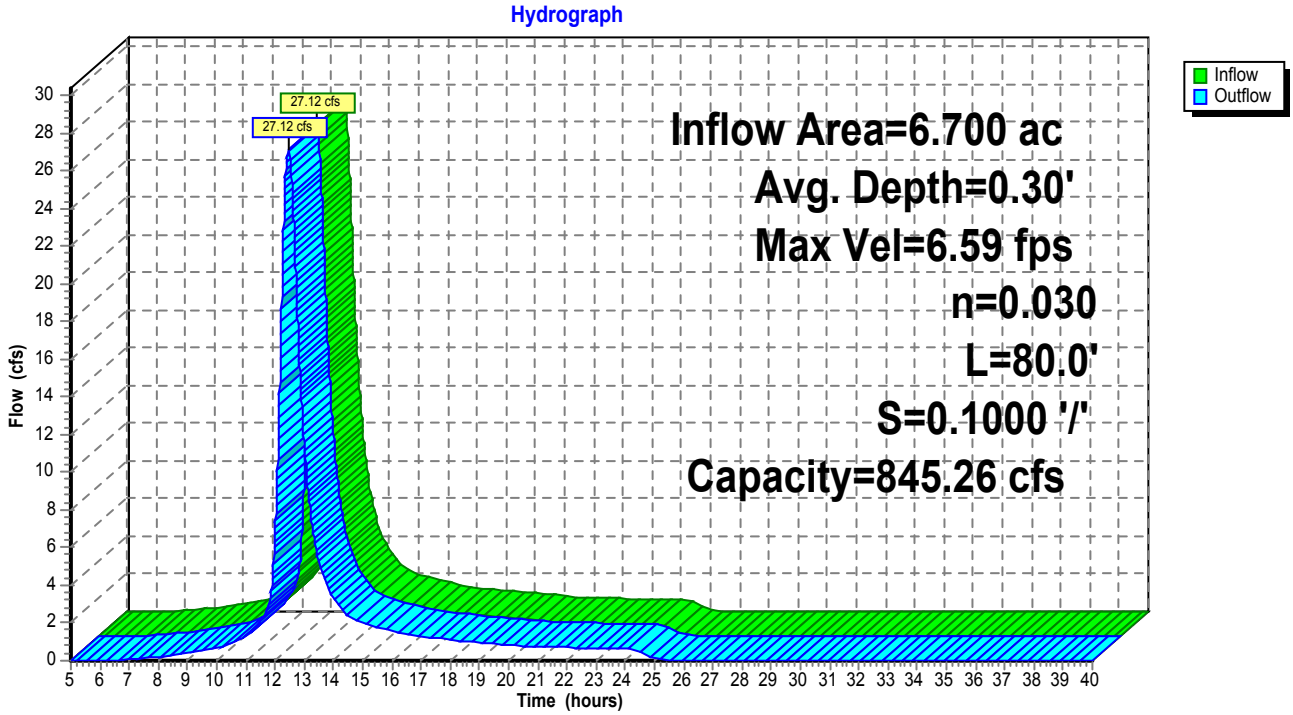

Summary for Reach 3R: Channel 1 - Downstream of Check Dams

[81] Warning: Exceeded Pond 1P by 817.01' @ 14.62 hrs

Inflow Area = 6.700 ac, 0.00% Impervious, Inflow Depth = 6.17" for 100-yr event
Inflow = 27.12 cfs @ 12.46 hrs, Volume= 3.444 af
Outflow = 27.12 cfs @ 12.46 hrs, Volume= 3.444 af, Atten= 0%, Lag= 0.1 min

Routing by Stor-Ind+Trans method, Time Span= 5.00-40.00 hrs, dt= 0.01 hrs
Max. Velocity= 3.64 fps, Min. Travel Time= 0.1 min
Avg. Velocity = 1.08 fps, Avg. Travel Time= 0.3 min

Peak Storage= 136 cf @ 12.46 hrs, Average Depth at Peak Storage= 0.51'
Bank-Full Depth= 1.00', Capacity at Bank-Full= 90.50 cfs

12.00' x 1.00' deep channel, n= 0.030
Side Slope Z-value= 5.0 '/' Top Width= 22.00'
Length= 18.2' Slope= 0.0165 '/'
Inlet Invert= 817.00', Outlet Invert= 816.70'

‡

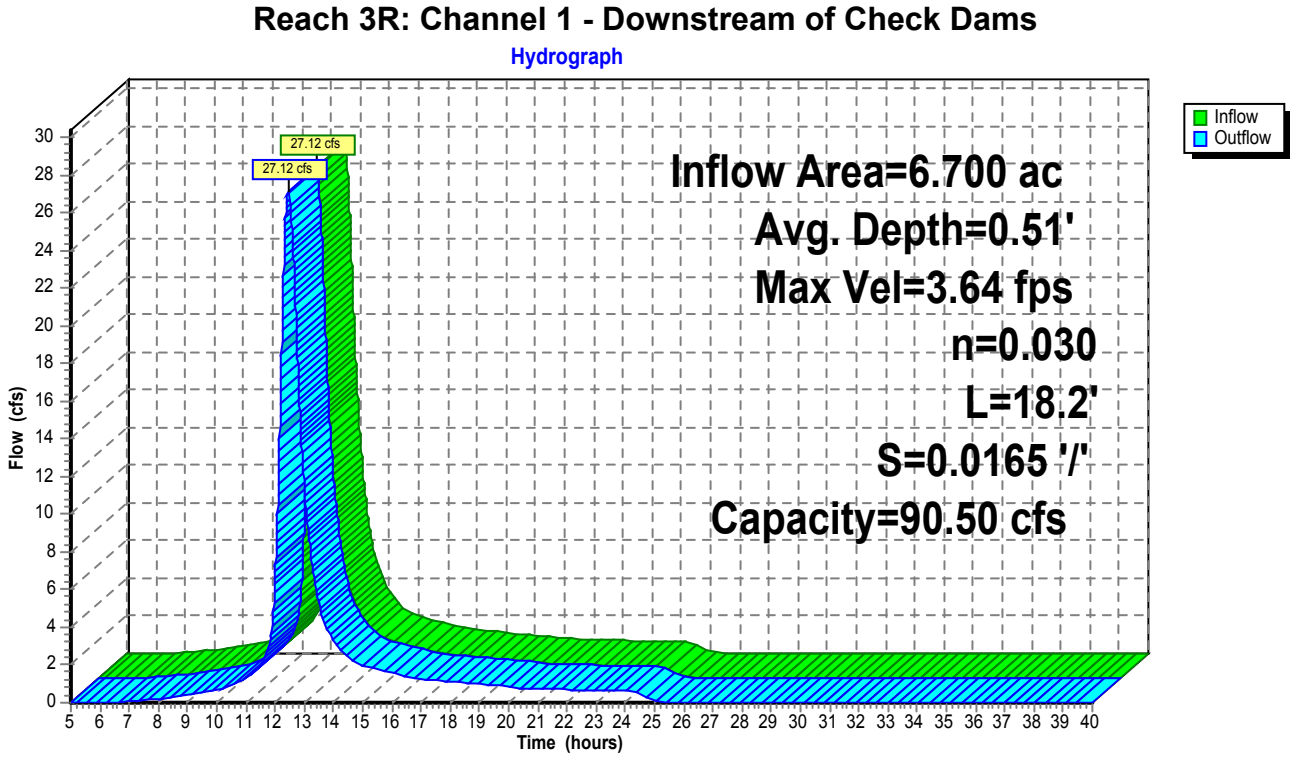

Summary for Reach 4R: Channel 1 - Downstream

Inflow Area = 6.700 ac, 0.00% Impervious, Inflow Depth = 6.17" for 100-yr event
Inflow = 27.12 cfs @ 12.46 hrs, Volume= 3.444 af
Outflow = 27.11 cfs @ 12.47 hrs, Volume= 3.444 af, Atten= 0%, Lag= 0.6 min

Routing by Stor-Ind+Trans method, Time Span= 5.00-40.00 hrs, dt= 0.01 hrs
Max. Velocity= 4.83 fps, Min. Travel Time= 0.4 min
Avg. Velocity = 1.42 fps, Avg. Travel Time= 1.5 min

Peak Storage= 698 cf @ 12.47 hrs, Average Depth at Peak Storage= 0.40'
Bank-Full Depth= 1.00', Capacity at Bank-Full= 138.57 cfs

12.00' x 1.00' deep channel, n= 0.030
Side Slope Z-value= 5.0 '/' Top Width= 22.00'
Length= 124.2' Slope= 0.0386 '/'
Inlet Invert= 813.00', Outlet Invert= 808.20'

‡

Reach 4R: Channel 1 - Downstream

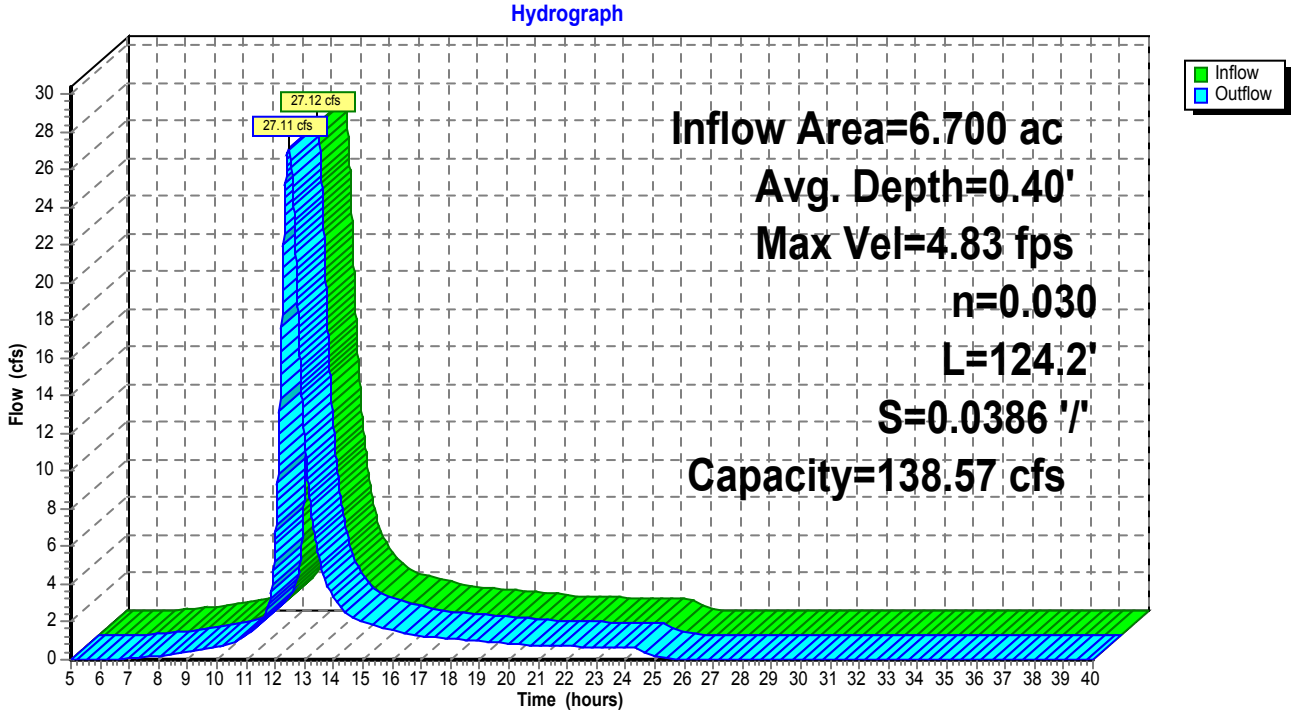

Summary for Reach 5R: 20 ft Grouted Riprap (0.2% Slope)

[79] Warning: Submerged Pond 2P Primary device # 1 INLET by 3.02'

Inflow Area = 60.200 ac, 0.00% Impervious, Inflow Depth = 6.17" for 100-yr event
Inflow = 234.85 cfs @ 12.43 hrs, Volume= 30.944 af
Outflow = 234.70 cfs @ 12.44 hrs, Volume= 30.944 af, Atten= 0%, Lag= 0.3 min

Routing by Stor-Ind+Trans method, Time Span= 5.00-40.00 hrs, dt= 0.01 hrs
Max. Velocity= 3.13 fps, Min. Travel Time= 0.1 min
Avg. Velocity = 1.07 fps, Avg. Travel Time= 0.3 min

Peak Storage= 1,502 cf @ 12.44 hrs, Average Depth at Peak Storage= 3.82'
Bank-Full Depth= 4.00', Capacity at Bank-Full= 256.22 cfs

12.00' x 4.00' deep channel, n= 0.040
Side Slope Z-value= 2.0 '/' Top Width= 28.00'
Length= 20.0' Slope= 0.0020 '/'
Inlet Invert= 803.40', Outlet Invert= 803.36'

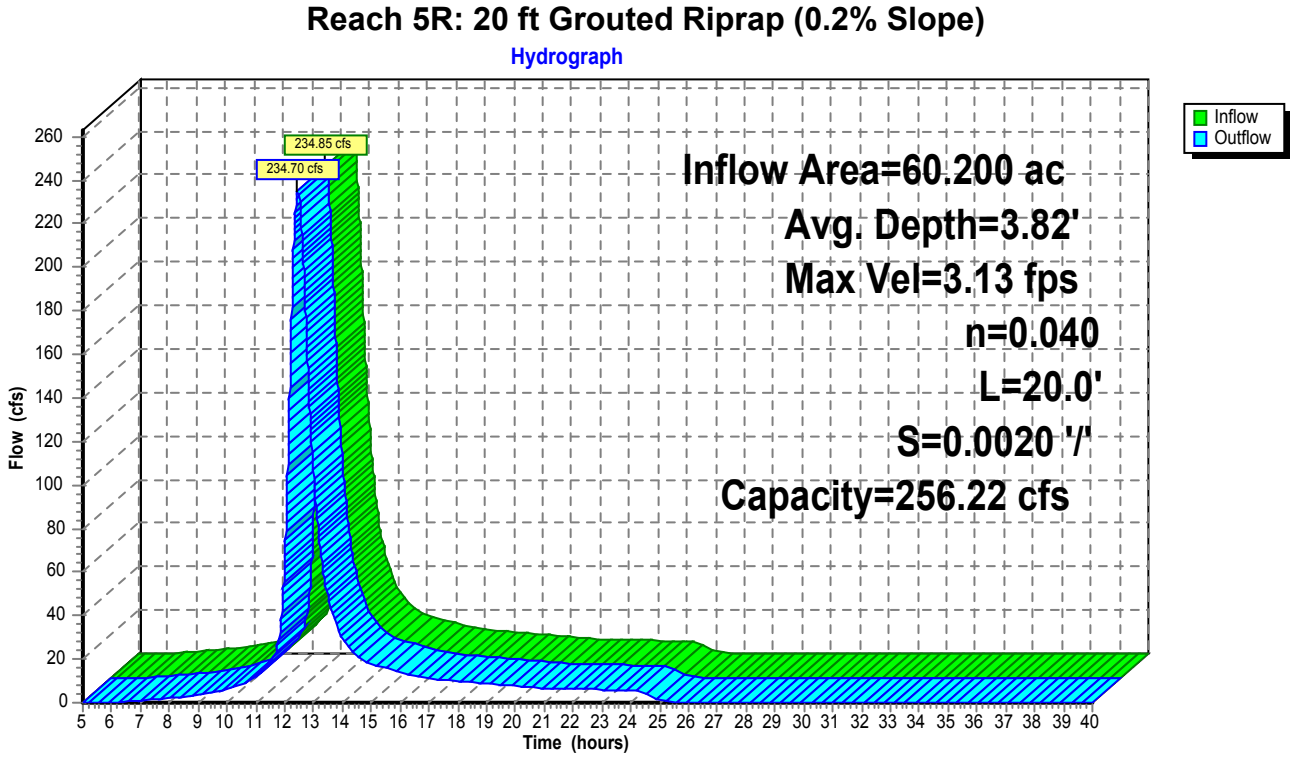

Summary for Reach 6R: 50 ft Grouted Riprap (6.6% slope)

[61] Hint: Exceeded Reach 5R outlet invert by 1.41' @ 12.44 hrs

Inflow Area = 60.200 ac, 0.00% Impervious, Inflow Depth = 6.17" for 100-yr event
Inflow = 234.70 cfs @ 12.44 hrs, Volume= 30.944 af
Outflow = 234.69 cfs @ 12.44 hrs, Volume= 30.944 af, Atten= 0%, Lag= 0.1 min

Routing by Stor-Ind+Trans method, Time Span= 5.00-40.00 hrs, dt= 0.01 hrs
Max. Velocity= 10.68 fps, Min. Travel Time= 0.1 min
Avg. Velocity = 3.35 fps, Avg. Travel Time= 0.2 min

Peak Storage= 1,099 cf @ 12.44 hrs, Average Depth at Peak Storage= 1.47'
Bank-Full Depth= 4.00', Capacity at Bank-Full= 1,471.90 cfs

12.00' x 4.00' deep channel, n= 0.040
Side Slope Z-value= 2.0 '/' Top Width= 28.00'
Length= 50.0' Slope= 0.0660 '/'
Inlet Invert= 803.30', Outlet Invert= 800.00'

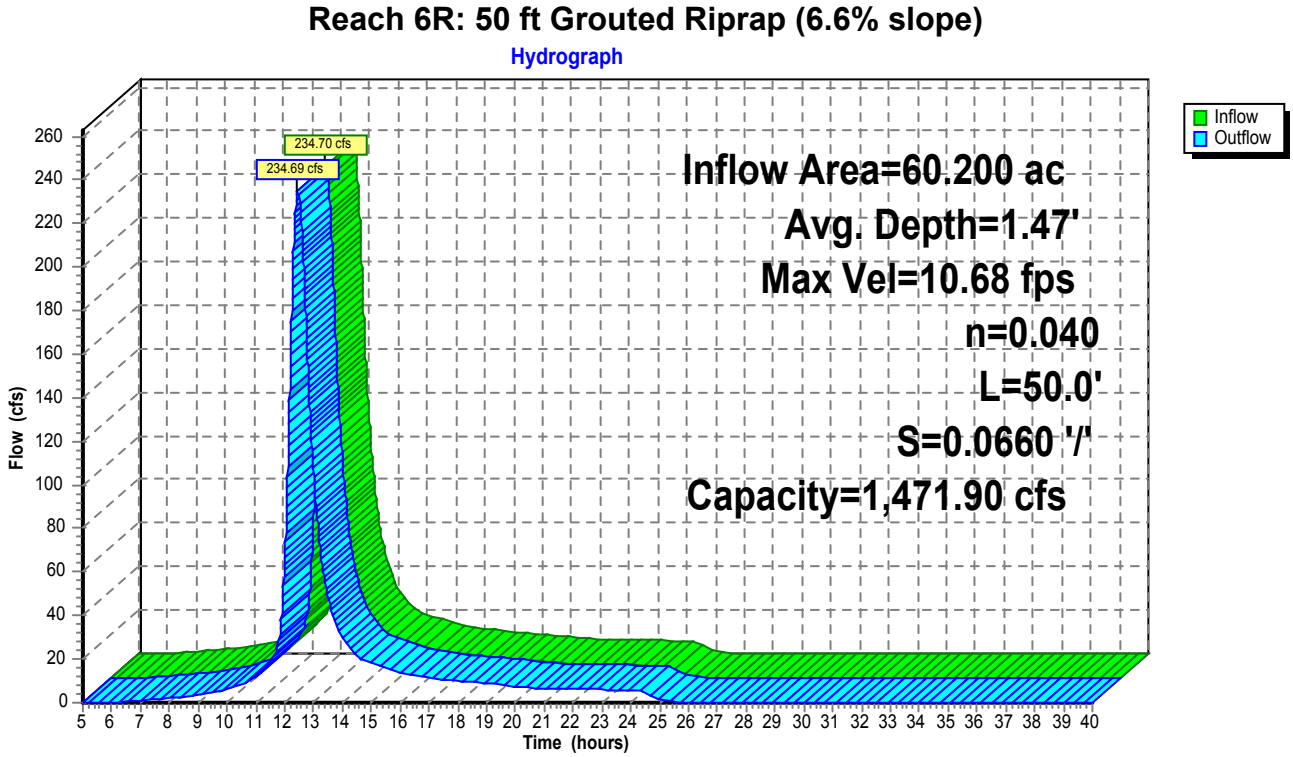

Summary for Reach 7R: 30 ft Grouted Riprap (1.3% slope)

[62] Warning: Exceeded Reach 6R OUTLET depth by 0.56' @ 12.45 hrs

Inflow Area = 60.200 ac, 0.00% Impervious, Inflow Depth = 6.17" for 100-yr event
Inflow = 234.69 cfs @ 12.44 hrs, Volume= 30.944 af
Outflow = 234.65 cfs @ 12.44 hrs, Volume= 30.944 af, Atten= 0%, Lag= 0.2 min

Routing by Stor-Ind+Trans method, Time Span= 5.00-40.00 hrs, dt= 0.01 hrs
Max. Velocity= 5.23 fps, Min. Travel Time= 0.1 min
Avg. Velocity = 1.84 fps, Avg. Travel Time= 0.3 min

Peak Storage= 1,346 cf @ 12.44 hrs, Average Depth at Peak Storage= 2.03'
Bank-Full Depth= 3.00', Capacity at Bank-Full= 526.63 cfs

12.00' x 3.00' deep channel, n= 0.040
Side Slope Z-value= 5.0 '/' Top Width= 42.00'
Length= 30.0' Slope= 0.0130 '/'
Inlet Invert= 800.00', Outlet Invert= 799.61'

‡

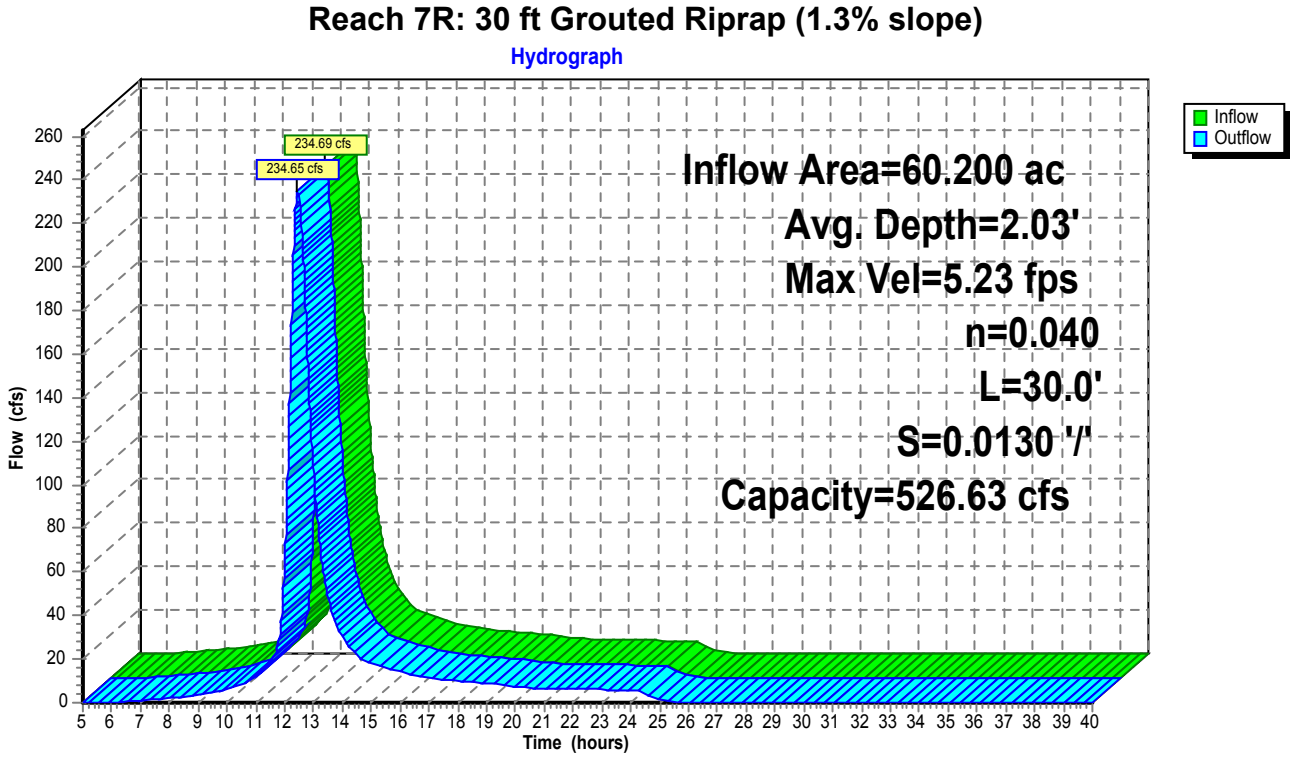

Summary for Reach 8R: Channel 2 - Downstream of Riprap

[62] Warning: Exceeded Reach 7R OUTLET depth by 0.01' @ 12.12 hrs

Inflow Area = 71.100 ac, 0.00% Impervious, Inflow Depth = 6.17" for 100-yr event
Inflow = 272.40 cfs @ 12.40 hrs, Volume= 36.547 af
Outflow = 272.19 cfs @ 12.45 hrs, Volume= 36.547 af, Atten= 0%, Lag= 3.3 min

Routing by Stor-Ind+Trans method, Time Span= 5.00-40.00 hrs, dt= 0.01 hrs
Max. Velocity= 6.71 fps, Min. Travel Time= 1.5 min
Avg. Velocity = 2.14 fps, Avg. Travel Time= 4.6 min

Peak Storage= 23,850 cf @ 12.43 hrs, Average Depth at Peak Storage= 1.89'
Bank-Full Depth= 2.00', Capacity at Bank-Full= 304.21 cfs

12.00' x 2.00' deep channel, n= 0.030
Side Slope Z-value= 5.0 '/' Top Width= 32.00'
Length= 587.5' Slope= 0.0130 '/'
Inlet Invert= 799.61', Outlet Invert= 792.00'

‡

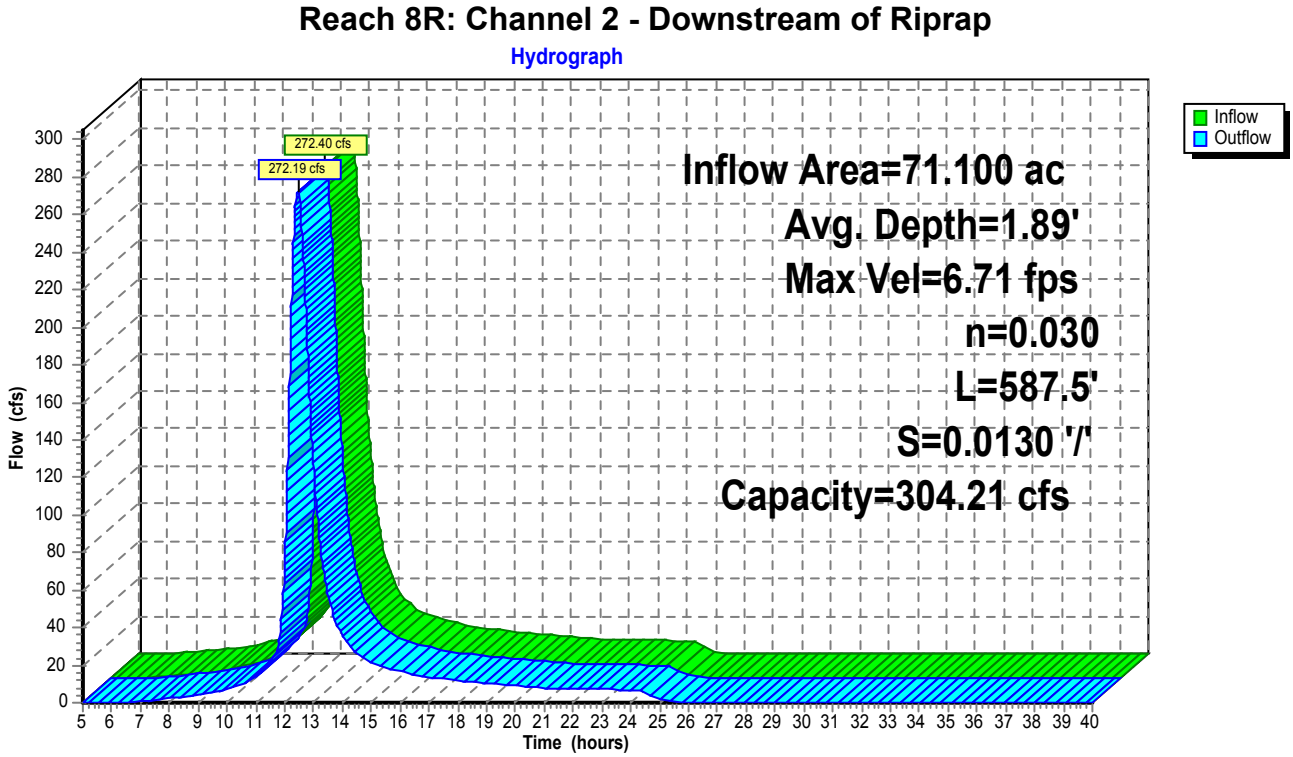

Summary for Reach 9R: Overflow Channel

[82] Warning: Early inflow requires earlier time span
[88] Warning: Qout>Qin may require Finer Routing>1
[85] Warning: Oscillations may require Finer Routing>1
[79] Warning: Submerged Pond 3P Secondary device # 2 by 0.43'

Inflow	=	38.26 cfs @	5.00 hrs,	Volume=	110.710 af
Outflow	=	66.52 cfs @	5.01 hrs,	Volume=	110.690 af, Atten= 0%, Lag= 0.6 min

Routing by Stor-Ind+Trans method, Time Span= 5.00-40.00 hrs, dt= 0.01 hrs
Max. Velocity= 17.46 fps, Min. Travel Time= 0.0 min
Avg. Velocity = 14.50 fps, Avg. Travel Time= 0.0 min

Peak Storage= 120 cf @ 5.01 hrs, Average Depth at Peak Storage= 0.73'
Bank-Full Depth= 1.00', Capacity at Bank-Full= 123.97 cfs

4.00' x 1.00' deep channel, n= 0.040
Side Slope Z-value= 2.0 '/' Top Width= 8.00'
Length= 30.0' Slope= 0.4900 '/'
Inlet Invert= 804.70', Outlet Invert= 790.00'

‡

Reach 9R: Overflow Channel

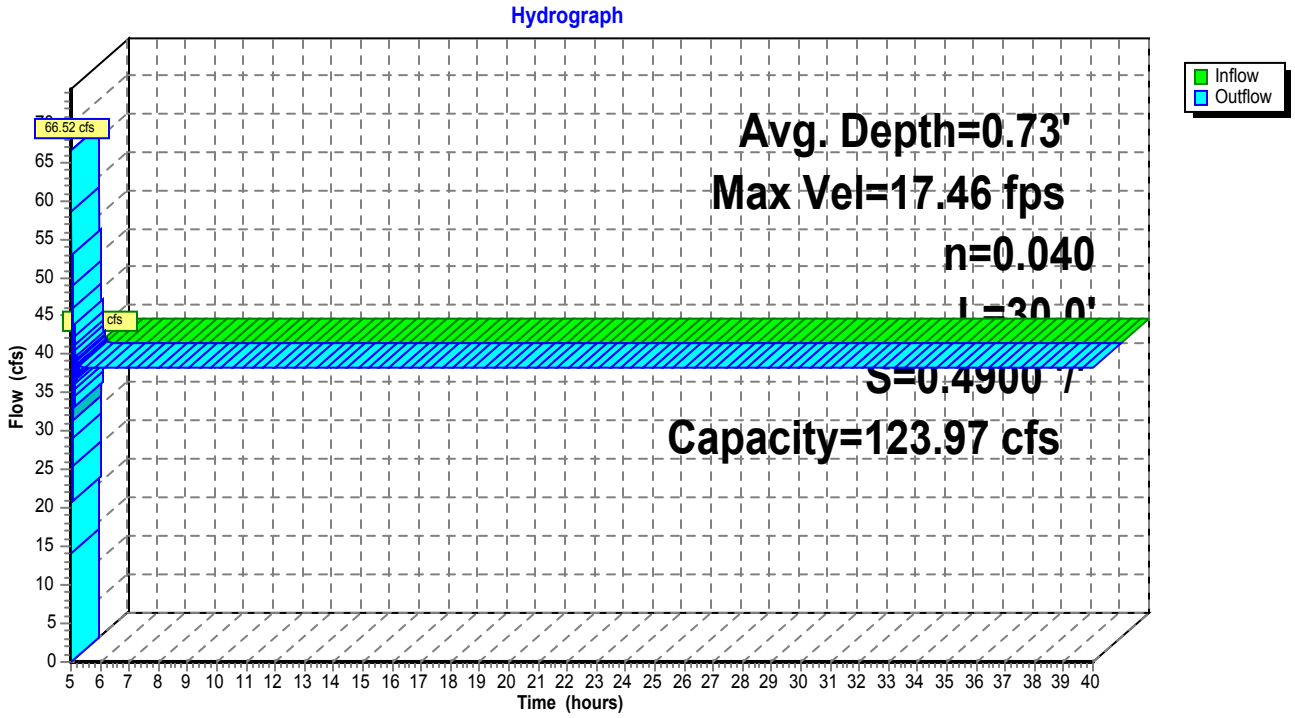

Summary for Reach 10R: Culvert (24 inch)

[52] Hint: Inlet/Outlet conditions not evaluated

Inflow Area = 0.700 ac, 0.00% Impervious, Inflow Depth = 5.92" for 100-yr event
Inflow = 4.19 cfs @ 12.16 hrs, Volume= 0.345 af
Outflow = 4.19 cfs @ 12.17 hrs, Volume= 0.345 af, Atten= 0%, Lag= 0.4 min

Routing by Stor-Ind+Trans method, Time Span= 5.00-40.00 hrs, dt= 0.01 hrs
Max. Velocity= 3.75 fps, Min. Travel Time= 0.3 min
Avg. Velocity = 1.27 fps, Avg. Travel Time= 0.8 min

Peak Storage= 68 cf @ 12.16 hrs, Average Depth at Peak Storage= 0.77'
Bank-Full Depth= 2.00', Capacity at Bank-Full= 13.27 cfs

24.0" Diameter Pipe, n= 0.025 Corrugated metal
Length= 60.5' Slope= 0.0127 '/'
Inlet Invert= 822.41', Outlet Invert= 821.64'

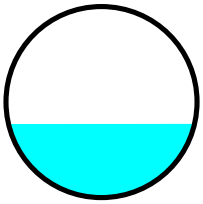

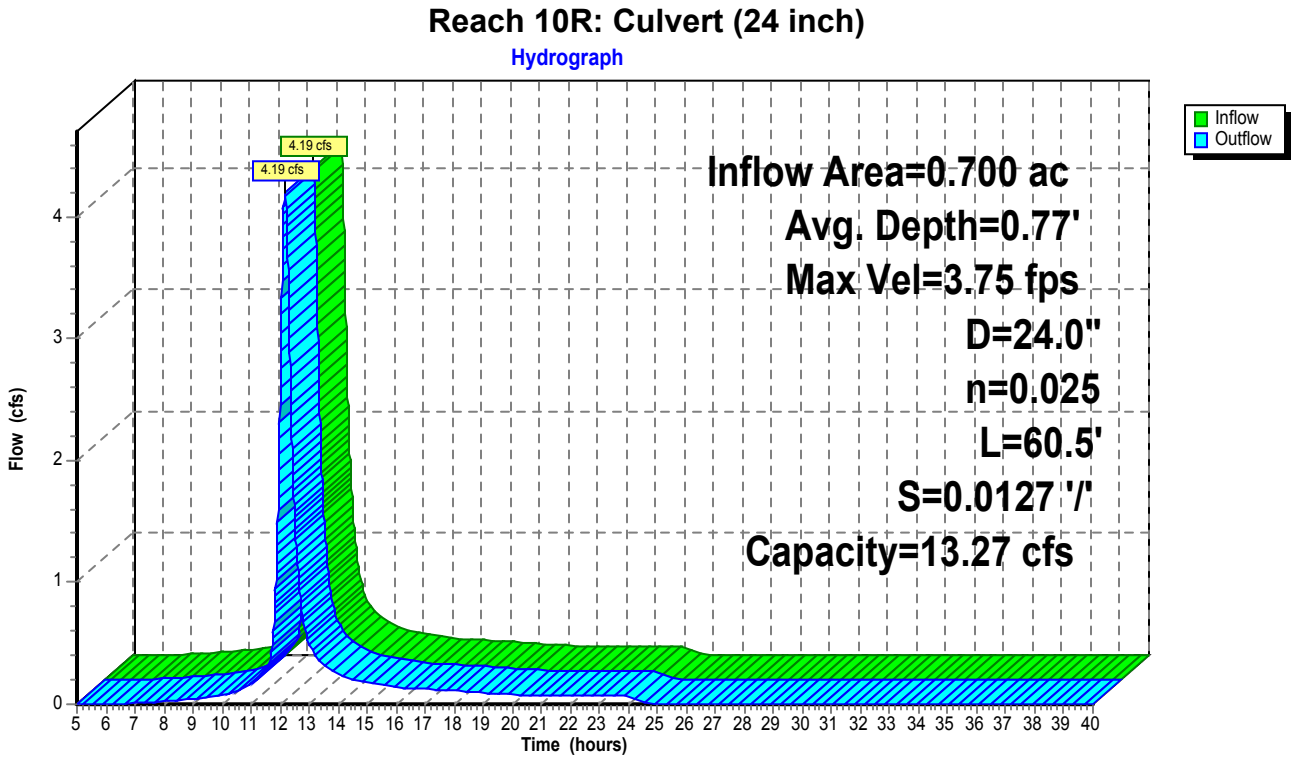

Summary for Pond 1P: Check Dam

[57] Hint: Peaked at 0.56' (Flood elevation advised)

Inflow Area =	6.700 ac,	0.00% Impervious,	Inflow Depth =	6.17"	for 100-yr event
Inflow =	27.12 cfs @	12.46 hrs,	Volume=	3.444 af	
Outflow =	27.12 cfs @	12.46 hrs,	Volume=	3.444 af,	Atten= 0%, Lag= 0.0 min
Primary =	27.12 cfs @	12.46 hrs,	Volume=	3.444 af	

Routing by Stor-Ind method, Time Span= 5.00-40.00 hrs, dt= 0.01 hrs
Peak Elev= 0.56' @ 12.46 hrs

Device	Routing	Invert	Outlet Devices
#1	Primary	0.00'	**17.0' long (Profile 30) Broad-Crested Rectangular Weir** Head (feet) 0.49 0.98 1.48 Coef. (English) 3.80 3.86 3.86

Primary OutFlow Max=27.12 cfs @ 12.46 hrs HW=0.56' (Free Discharge)
└─**1=Broad-Crested Rectangular Weir** (Weir Controls 27.12 cfs @ 2.85 fps)

Pond 1P: Check Dam

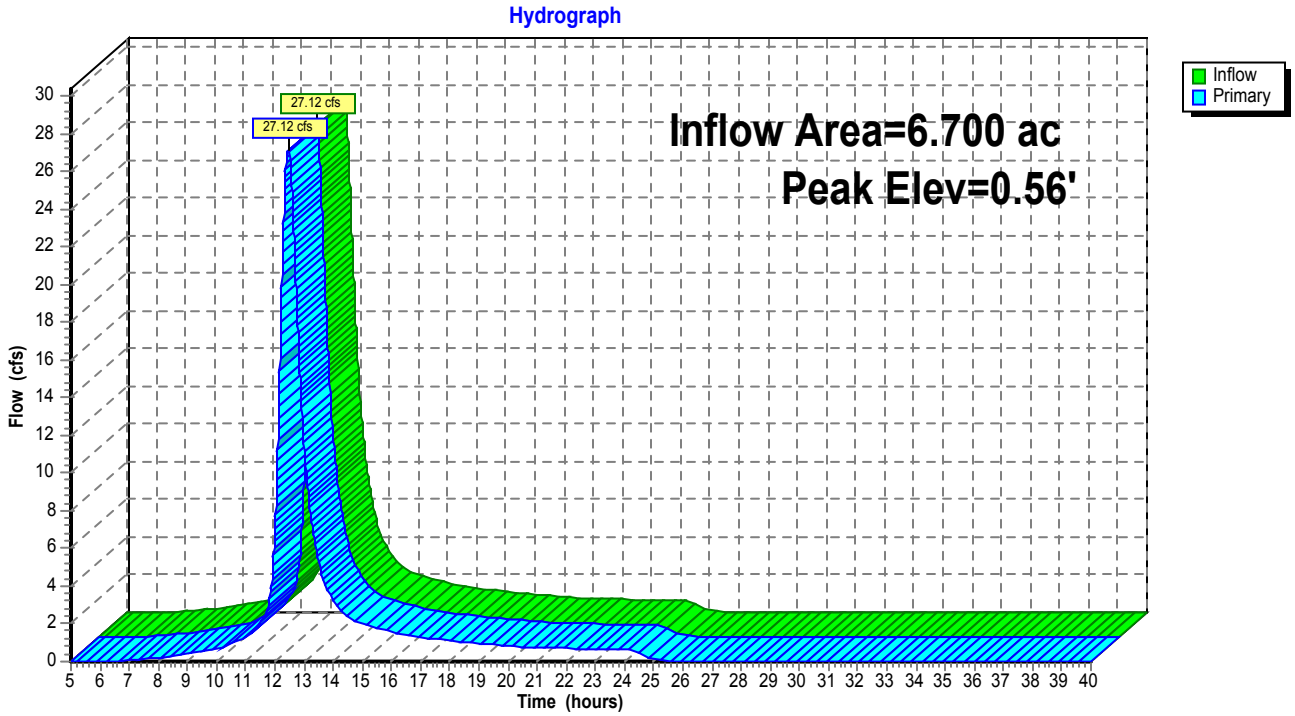

Summary for Pond 2P: Veterans Blvd Culvert

[57] Hint: Peaked at 810.67' (Flood elevation advised)

Inflow Area =	60.200 ac,	0.00% Impervious,	Inflow Depth =	6.17"	for 100-yr event
Inflow =	234.85 cfs @	12.43 hrs,	Volume=	30.944 af	
Outflow =	234.85 cfs @	12.43 hrs,	Volume=	30.944 af,	Atten= 0%, Lag= 0.0 min
Primary =	234.85 cfs @	12.43 hrs,	Volume=	30.944 af	

Routing by Stor-Ind method, Time Span= 5.00-40.00 hrs, dt= 0.01 hrs
Peak Elev= 810.67' @ 12.43 hrs

Device	Routing	Invert	Outlet Devices
#1	Primary	804.20'	**5.00' W x 7.00' H x 102.0' long Culvert** Box, 30-75° wingwalls, square crown, Ke= 0.400 Outlet Invert= 803.40' S= 0.0078 '/' Cc= 0.900 n= 0.013 Concrete, trowel finish

Primary OutFlow Max=234.71 cfs @ 12.43 hrs HW=810.66' (Free Discharge)
└─**1=Culvert** (Barrel Controls 234.71 cfs @ 9.68 fps)

Pond 2P: Veterans Blvd Culvert

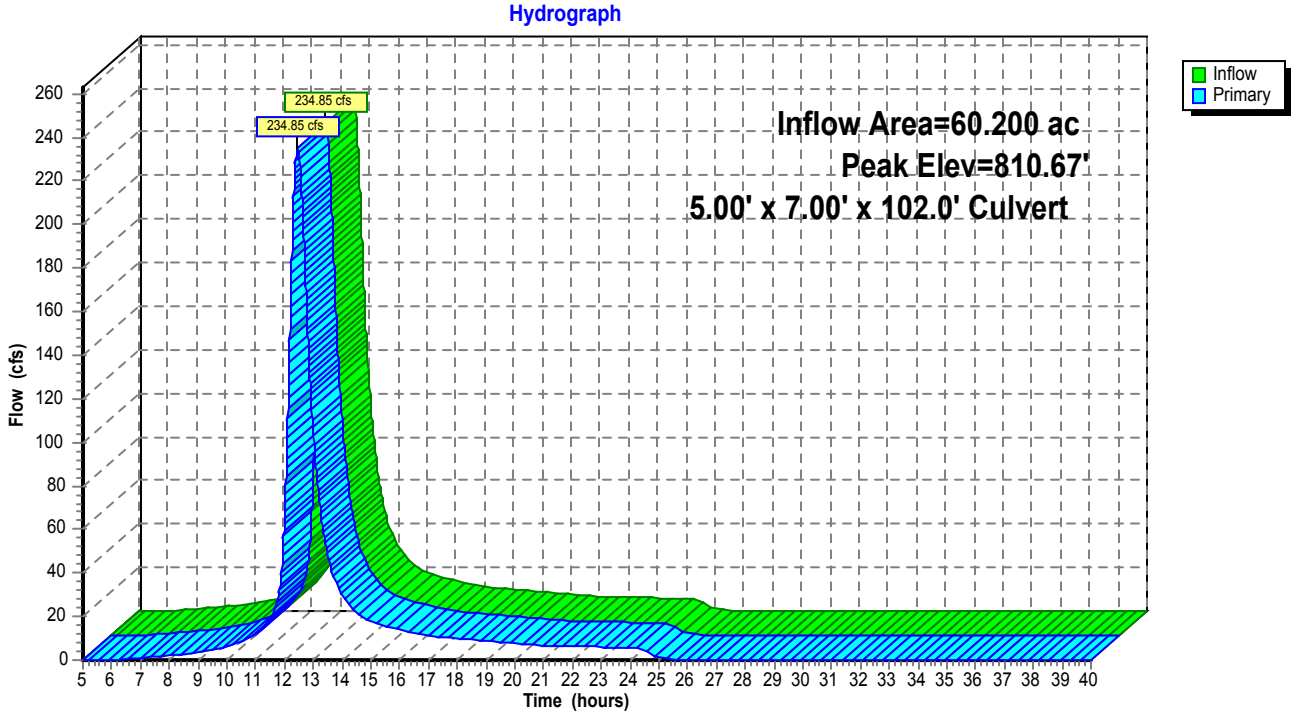

Summary for Pond 3P: East Pond Outlet

119.05 is the total flow that the existing concrete weir can handle in ideal conditions.

---

[57] Hint: Peaked at 805.80' (Flood elevation advised)

Inflow	=	170.85 cfs @	5.00 hrs,	Volume=	494.335 af, Incl. 170.85 cfs Base Flow
Outflow	=	170.85 cfs @	5.00 hrs,	Volume=	494.335 af, Atten= 0%, Lag= 0.0 min
Primary	=	132.59 cfs @	5.00 hrs,	Volume=	383.626 af
Secondary	=	38.26 cfs @	5.00 hrs,	Volume=	110.710 af

Routing by Stor-Ind method, Time Span= 5.00-40.00 hrs, dt= 0.01 hrs
Peak Elev= 805.80' @ 5.00 hrs

Device	Routing	Invert	Outlet Devices
#1	Primary	804.20'	**20.0' long x 1.0' breadth Broad-Crested Rectangular Weir** Head (feet) 0.20 0.40 0.60 0.80 1.00 1.20 1.40 1.60 1.80 2.00 2.50 3.00 Coef. (English) 2.69 2.72 2.75 2.85 2.98 3.08 3.20 3.28 3.31 3.30 3.31 3.32
#2	Secondary	805.00'	**20.0' long x 4.0' breadth Broad-Crested Rectangular Weir** Head (feet) 0.20 0.40 0.60 0.80 1.00 1.20 1.40 1.60 1.80 2.00 2.50 3.00 3.50 4.00 4.50 5.00 5.50 Coef. (English) 2.38 2.54 2.69 2.68 2.67 2.67 2.65 2.66 2.66 2.68 2.72 2.73 2.76 2.79 2.88 3.07 3.32

Primary OutFlow Max=132.59 cfs @ 5.00 hrs HW=805.80' (Free Discharge)
└─**1=Broad-Crested Rectangular Weir** (Weir Controls 132.59 cfs @ 4.15 fps)

Secondary OutFlow Max=38.26 cfs @ 5.00 hrs HW=805.80' (Free Discharge)
└─**2=Broad-Crested Rectangular Weir** (Weir Controls 38.26 cfs @ 2.40 fps)

Pond 3P: East Pond Outlet

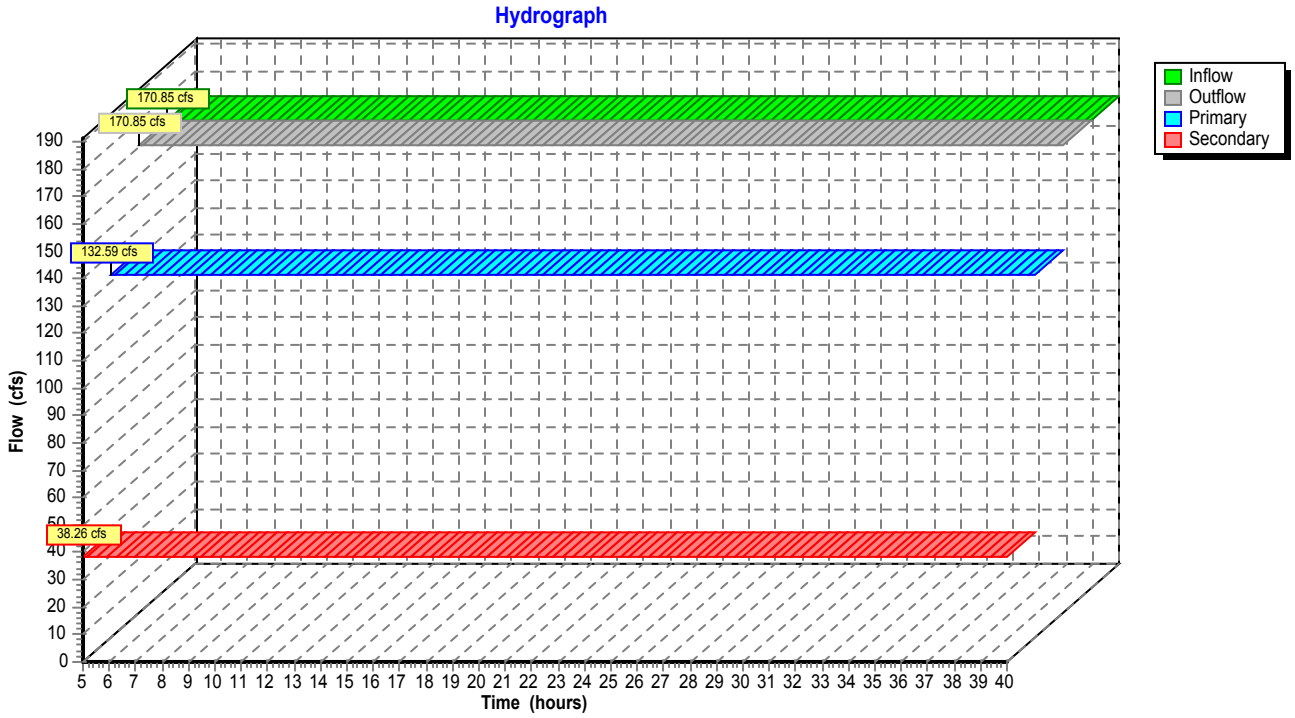

Appendix F

Cost Estimate

ENGINEER'S CONSTRUCTION ESTIMATE

Item	Unit	Quantity	Unit Cost	Total Cost
1 Mobilization/Demobilization	LS	1	N/A	$61,000
2 Erosion and Sediment control	LS	1	N/A	$16,000
3 Site Clearing	LS	1	N/A	$24,500
4 Excavation	CY	2,543	$7.00	$17,800
5 Site Grading	SY	12,299	$5.00	$61,500
6 Clay Fill	CY	419	$50.00	$21,000
7 Topsoil	CY	1,526	$60.00	$91,600
8 Riprap	ton	82	$55.00	$4,500
9 On-Site Riprap	ton	96	$45.00	$4,300
10 Grouted Riprap and Utility Protection	LS	1	N/A	$50,900
11 Geotextile Filter Fabric	SY	1,495	$6.00	$9,000
12 Coconut Fiber Blanket	SY	2,334	$8.00	$18,700
13 TRM/FGM Armor	SY	4,163	$10.50	$43,700
14 Seeding	AC	12	$1,500.00	$18,000
			Construction Cost Subtotal	**$442,500**
15 Bonds	LS	1	N/A	$51,000
16 Insurance	LS	1	N/A	$11,000
			Total Estimated Project Cost	**$505,000**

UNIT PRICE SCHEDULE

ITEM DESCRIPTION		Unit	Estimated Quantity	Unit Cost	Total Estimated Cost	Cost Basis/Reference
1 Mobilization/Demobilization		LS	1	$61,000.00	$61,000.00	12% of Project Total
2 Erosion and Sediment control		LS	1	$16,000.00	$16,000.00	3% of Project Total
3 Site Clearing						
Clearing Woodchips		SY	8,847	$1.50	$13,270.50	
Remove Storm Wattles		LF	1,134	$1.00	$1,134.00	
Remove Silt Fence		LF	575	$1.00	$575.00	
Riprap Clearing/Stockpiling		tons	176	$40.00	$7,040.00	
Remove/Stockpile Boulders		EA	5	$500.00	$2,500.00	
	Total	LS	1		24,520.00	Engineer's Estimate
4 Excavation						
Channel 1		CY	377			
Channel 2		CY	2,099			
Check Dams		CY	45			
Overflow Channel		CY	21			
	Total	CY	2,543	$7.00	$17,801.00	31 23 1646 4400, RSMeans 2011, US Average costs
5 Site Grading						
Moderate Erosion Areas		SY	12,299			
	Total	SY	12,299	$5.00	$61,495.00	31 22 1610 1050, 32 91 1323 2610, RSMeans 2011, US Average costs
6 Clay Fill						
Channel 1		CY	105			
Channel 2		CY	174			
Overflow Channel		CY	140			
	Total	CY	419	$50.00	$20,950.00	31 05 1310 0700, 31 05 1310 0900, RSMeans 2011 US Average costs, Engineer's Estimate

UNIT PRICE SCHEDULE

ITEM DESCRIPTION		Unit	Estimated Quantity	Unit Cost	Total Estimated Cost	Cost Basis/Reference
7 Topsoil						
High Erosion Areas		CY	189			
Poor Soil Areas		CY	1,337			
	Total	CY	1,526	$60.00	$91,560.00	31 05 1310 0700, 31 05 1310 0900, RSMeans 2011, US Average costs, Engineer's Estimate
8 Riprap						
Check Dams		ton	82			
	Total	ton	82	$55.00	$4,510.00	31 37 1310 0370, RSMeans 2011, US Average costs
9 On-Site Riprap						
Overflow Channel		ton	55			
High Erosion Area 11		ton	11			
Riprap Channel Armor		ton	30			
	Total	ton	96	$45.00	$4,320.00	31 37 1310 0370, RSMeans 2011, US Average costs
10 Grouted Riprap and Utility Protection						
Channel 2		ton	328	$90.00	$29,520.00	
Hand Work Around Utilities		LS	1	$20,000.00	$20,000.00	
Gravel Backfill around Utilities		ton	27	$52.50	$1,417.50	
	Total	LS	1		$50,937.50	Similar project
11 Geotextile Filter Fabric						
Check Dams		SY	898			
Channel 2		SY	480			
Overflow Channel		SY	69			
Below Large Rock		SY	35			
High Erosion Area 11		SY	13			
	Total	SY	1,495	$6.00	$8,970.00	31 32 1916 1500, RSMeans 2011, US Average costs, ASP Quote

UNIT PRICE SCHEDULE

ITEM DESCRIPTION		Unit	Estimated Quantity	Unit Cost	Total Estimated Cost	Cost Basis/Reference
12 Coconut Fiber Blanket						
High Erosion Areas		SY	2,334			
	Total	SY	2,334	$8.00	$18,672.00	Average bid from similar project
13 TRM/FGM Armor						
Channel 1		SY	1,390			
Channel 2		SY	2,462			
Overflow Channel		SY	311			
	Total	SY	4,163	$10.50	$43,711.50	Greensource Environmental quote
14 Seeding						
High Erosion Areas		AC	0.5			
Moderate Erosion Areas		AC	2.5			
Low Erosion Areas		AC	1.6			
Poor Soil Areas		AC	3.3			
Channel 1		AC	0.3			
Channel 2		AC	0.4			
Limits of Construction		AC	3.0			
	Total	AC	12.0	$1,500.00	$18,000.00	32 92 1913 0020, RSMeans 2011, US Average costs
			Construction Cost Subtotal		**$442,447.00**	
15 Bonds		LS	1	$51,000.00	$51,000.00	10% of Project Total
16 Insurance		LS	1	$11,000.00	$11,000.00	2% of Project Total
			Total Estimated Project Cost		**$504,447.00**	

Notes:

LF = Lineal Feet, CY = Cubic Yard, AC = Acres, EA = Each, ton = 2,000 Pounds